POSjet® 1500

PROGRAMMER'S GUIDE

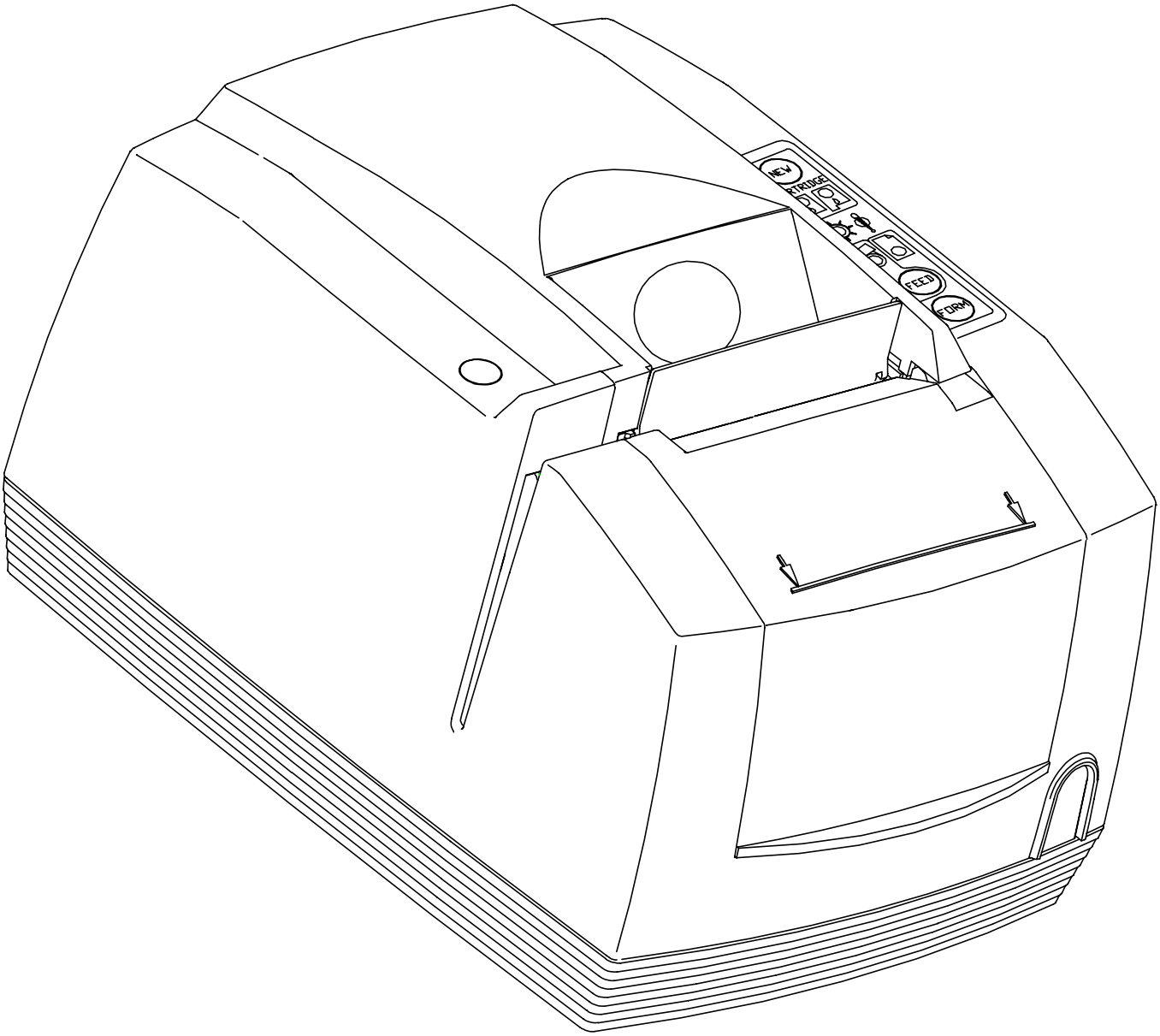

ithaca
a product of TRANSACT

PN: 20-03398
Rev A
Oct-2001

Change Log

Rev A April 19, 2000

1. Initial Release Rev A

Product Information

Disclaimer

Information in this publication is subject to change without notice. However, as product improvements become available, TransAct Technologies Incorporated will make every effort to provide updated information for the products described in this publication. TransAct Technologies Incorporated cannot guarantee that changes in software and equipment made by other manufacturers, and referred to in this publication, do not affect the applicability of information in this publication.

Federal Communications Commission Radio Frequency Interference Statement

The POSjet® 1500 Printer complies with the limits for a Class A computing device in accordance with the specifications in Part 15 of FCC rules. These regulations are designed to minimize radio frequency interference during installation; however, there is no guarantee that radio or television interference will not occur during any particular installation. Interference can be determined by turning the equipment off and on while the radio or television is on. If the printer causes interference to radio or television reception, try to correct the interference by one or more of the following measures:

- Reorient the radio or television receiving antenna
- Relocate the printer with respect to the receiver
- Plug the printer and receiver into different circuits

If necessary, the user should consult their dealer or an experienced radio/television technician for additional suggestions. The user may find the following booklet prepared by the Federal Communications Commission helpful: How to Identify and Resolve Radio/TV Interference Problems. This booklet is available from the US Government Printing Office, Washington, DC 20402. Ask for stock number 004-000-00345-4.

Canadian Department of Communications Radio Interference Statement

The POSjet® 1500 Printer does not exceed Class A limits for radio noise emissions from digital apparatus set out in the Radio Interference Regulations of the Canadian Department of Communications.

Regulatory Compliance

North America:

EMI:	FCC Class A
Safety:	UL (US)
	CUL (Canada)

Europe:

CE Marking:	EN55022
	EN50081-1
Safety:	TUV
Other:	CB Certificate

© 2001 TransAct Technologies Incorporated. All rights reserved.
Revision Level A
October, 01
Printed in USA

POSjet® is a trademark of TransAct Technologies Incorporated registered in the U.S. Patent and Trademark Office. PcOS is a registered trademark of Transact Technologies Incorporated. Ithaca® is a registered trademark of TransAct Technologies. IBM is a registered trademark of the International Business Machines Corporation. Epson and ESC/POS are registered trademarks of the Seiko Epson Corporation. Microsoft, Windows, Windows NT, and Plug and Play are trademarks of the Microsoft Corporation. Patents Pending. Microline is a registered trademark of OKI Electric Industry Co., LTD.

TransAct Product Support

Monday through Friday, 8 A.M. to 5 P.M. Eastern Standard Time (excluding holidays). To obtain Technical Support, call: TransAct's Ithaca Facility at (607) 257-8901, or (877) 7ITHACA.

Service Information

TransAct Technologies Incorporated has a full service organization to meet your printer service and repair requirements. If your printer needs service, please contact your authorized printer service center. If any problems still persist, you can directly contact the Ithaca Facility's Technical Support Department at (607) 257-8901 or (877) 7ITHACA for a return authorization. International customers should contact your distributor for services. TransAct offers the following service programs to meet your needs.

- Extended Warranty
- Depot Repair
- Maintenance Contract
- Internet Support

Please have the following information at hand:

1. The Model Number and Serial Number.
2. A list of any other peripheral devices attached to the same port as the printer.
3. The application software, operating system, and network you are using.
4. A copy of your printer's Configuration Settings.
5. What happend and what you were doing when the problem occurred.
6. How you tried to solve the problem.

Warranty Information

TransAct's POSjet® 1500 Printers come with a standard 24-month warranty that commences upon shipment from factory, and covers parts and labor. An optional warranty, covering both parts and labor for an additional 12 months, may be purchased separately. Repairs are warranted for 90 days from the date of repair or for the balance of the original warranty period, which ever is greater.

Return Materials Authorization and Return Policies

If the technical support person determines that the printer should be serviced at our facility, and you want to return the printer for repair, a Returned Materials Authorization (RMA) number must be issued before returning the printer. Prepare the printer being returned for repair as follows:

1. Remove and discard ink cartridges.

2. Pack the printer to be returned in the original packing material. Packing items may be purchased from TransAct's Ithaca Facility.

3. Return only the accessories that a Support Technician asks you to include.

4. Write the RMA number clearly on the outside of the box.

Shipping Printers

Never ship a printer by any means with any ink cartridge(s) installed. Be sure to save the packing materials in the event that you need to send the printer in for servicing. TransAct Technologies is not responsible for damaged return items that are not packaged in original shipping material.

Where Can You Find More Information?

Our Internet Support and Sales Services

www.transact-tech.com

TransAct Technologies Inc. maintains an Internet web site with content devoted to product support. Within the Support Services section you can find the most current versions of the Operator's Guide and Programmer's Guide.

1. Upon entering our web site, you will be brought to the "Welcome to TransAct" screen. This intro page has the Ithaca Brand listed at the top right. Click on the Ithaca logo.
2. Locate and click on the **Technical Support** button in the green area of the "Welcome to Ithaca" screen.
3. Use the bottom pulldown box to select the appropriate information for the printer model that you are using.

Contacting TransAct's Ithaca Facility

Contact TransAct's Ithaca facility for information about the POSjet® 1500 Printer and how it works with your system. For information on International distribution, visit our web site at www.transact-tech.com. Contact the TransAct's Sales and Technical Support Departments at the following address and telephone or fax numbers.

Technical Support

Receive technical support, order documentation, request additional information, or send in a printer for service.

Sales

Order supplies, receive more product information, or order product brochures.

TransAct Technologies Incorporated

Ithaca Facility
20 Bomax Drive
Ithaca, NY 14850 USA

Telephone	(877) 7ITHACA or (607) 257-8901
Main fax	(607) 257-8922
Sales fax	(607) 257-3868
Technical Support fax	(607) 257-3911
Web site	http://www.transact-tech.com

Table of Contents

Product Information iii
Disclaimer iii
Federal Communications Commission Radio Frequency Interference Statement iii
Canadian Department of Communications Radio Interference Statement iii
Regulatory Compliance iii
TransAct Product Support iv
Service Information iv
Warranty Information iv
Return Materials Authorization and Return Policies iv
Shipping Printers iv
Where Can You Find More Information? v
Our Internet Support and Sales Services v
Contacting TransAct's Ithaca Facility v
Technical Support v
Sales v
TransAct Technologies Incorporated v
Table of Contents vi
Table of Tables xiv
Table of Figures xv
Table of Flow Charts xvi
Section 1: Setup and Installation Procedures 1
Overview of Printer Controls 2
Leaving the 1500 Connected to a Power Source 2
Operating the Keypad Controls 2
Button Function Descriptions: 3
* Button 3
NEW CARTRIDGE Button 3
Cartridge Status Monitoring 3
Printing Cartridge Status 3
Printing Ink Remaining Status 3
FEED Button 3
Form Button 3
Open Cover Button 4
Indicator Light Descriptions 5
Power Indicator Light (LED) 5
Error Indicator Light (LED) 5
Paper Indicator Light (LED) 5
Form Indicator 5
Left and Right Cartridge Indicator Lights (LED) 5
Step 1: Unpack the Printer 6
Step 2: Connect Power and Communications 7
Installation Overview 7
Using the Cable Restraints 8
Connecting the Communication Cable 9
Connecting Serial Cables 9
Connecting Parallel Cables 10
Connecting USB Cables 10
Connecting the Cash Drawer 11
Connecting Cash Drawer Cable to the Printer 11
Connecting the Power Cord (with power supply) 12

Connecting the DC Power Cord (no power supply) 13
Step 3: Paper Low Setup 14
Adjusting the Paper-Low Sensor 14
Paper Low Adjustment Requirements 15
Step 4: Loading Ink Cartridges and Paper 16
Installing Ink Cartridges 16
Installing a New Paper Roll Using Insta-Load™ 18
STEP 5: Printing the Configuration Summary Receipt 20
Placing the Printer In Self-Test Mode (printing the Configuration Summary Receipt) 20
Exiting Self-Test Mode 20
Matching Printer Configuration Settings to your System 20
STEP 6: Verifying the Printer Setup 21
Verify the communications interface card 21
Parallel Interface 21
Serial Interface 21
USB Interface 21
Changing Interface Cards 21
Removing the Old Interface Card 21
Installing the new interface card 22
Verify the Cash Drawer Interface 22
Matching the Cash Drawer Interface 22
Section 2: Operational Information 24
Overview of Printer Controls 25
Leaving the 1500 Connected to a Power Source 25
Operating the Keypad Controls 25
Button Function Descriptions: 26
* Button 26
NEW CARTRIDGE Button 26
Cartridge Status Monitoring 26
Printing Cartridge Status 26
Printing Ink Remaining Status 26
FEED Button 26
Form Button 26
Indicator Light Descriptions 28
Power Indicator Light (LED) 28
Error Indicator Light (LED) 28
Paper Indicator Light (LED) 28
Form Indicator 28
Left and Right Cartridge Indicator Lights (LED) 28
Using Ink Cartridges 29
Care of Ink Cartridges 29
Determining Ink Cartridge Status 30
Using Validation: Form Insertion and Orientation 31
Validation Orientation 31
Form Requirements 31
Landscape Mode 31
Portrait Mode 31
Printer Settings 31
Inserting Validation Forms 32
Preventing and Clearing Validation Jams 33
Removing a Validation Jam 33
Removing a Validation Jam Manually 33
Printer Self Testing and Diagnostics 34

Printer Self-Testing 34
TEST-Receipt 34
TEST-Print Configuration 34
TEST-Validation 34
TEST-Check Test 34
Placing the Printer In Self-Test Mode 35
Exiting Self-Test Mode 35
Remote Power Down 35
Self-Test Hints and Suggestions 35
Level 0 Diagnostics 36
Level 0 diagnostics perform the following tasks: 36
Cold Power On 36
Firmware Test 36
Boot Loader Mode 36
Extended Diagnostics 37
Self-Test Diagnostics 37
Hex-dump Mode 37
Understanding Configuration Mode 38
Remote Configuration Software 38
Manual Configuration 38
Manual Emulation Set 38
Using Self-Test to View Configuration Settings 39
Entering Configuration Mode 39
Making Changes in Configuration Mode 40
Using the NEW CARTRIDGE Button in Configuration Mode 40
Configurable Features 41
Printer Color Configuration 48
Ink Cartridge Setup 48
Single Color Setup 48
Two-Color Ready Setup (single cartridge setup) 49
Two Color Setup (two cartridge setup) 49
Deactivating the Two-Color Setup (back to Single Color setup) 49
Section 3: Data Processing and Communications 51
Printer Flow Control and Print Buffers 51
Section 4: Port Protocols and Connection Specifics 54
Universal Serial Bus (USB) 54
USB Support and Standards 54
Parallel Port 55
Parallel Port Protocol 55
Parallel Port Timing 55
Printer Buffer Size 57
Parallel Port Inquire and IEEE 1284 57
IEEE 1284 Response Buffer 57
Mode 4 57
Mode 0 57
Time-outs 58
Active State 58
Inquire Responses 58
Parallel Port Plug and Play 58
The Plug and Play response follows. 58
Serial Port 59
Serial Port Protocol 59
Print Buffer Flow 61

Printer Buffer Size 63
Serial Mode Plug and Play 63
Using DSR 63
Serial Device Identification 63
Serial Port Inquire 64
Display Pass Through 65
Pass Through Restrictions and Considerations 65
Remote Power Control 65
Remote Printer Reset 66
Reset in Serial Mode 66
Reset in Parallel Mode 66
Miscellaneous Communication Features 67
Power-cycle Recovery 67
Data Pass-through 67
Multi-drop Configuration 67
Off-line Active 67
Section 5: Color Printing and Print Drivers 68
Character Graphics 68
APA Graphics 71
Creating an APA graphics file 71
Color Graphics 72
Procedure for Color Horizontal Graphics: 73
Section 6: Printer Drivers and Printer Controls 75
General Driver Information 75
Windows Printer Driver: 75
OPOS Driver: 75
POSPrinter ActiveX Control (OCX): 75
Installing Windows™ Printer Drivers (WIN95, 98, Me) 76
Printer Driver Installation Instructions for NT4.0, 2000 76
OPOS Drivers Installation Instructions 77
To Install the USB drivers 77
Configuring Windows™ Printer Drivers (WIN95, 98, Me) 78
Start/EndDoc Tab 78
Font Options Tab (Win 9x/Me only) 79
To view, edit, or delete the custom settings 80
Configuring Ithaca OPOS Drivers 81
Printer driver 81
Printing 81
General Settings 81
Performance 82
Communications Port: 82
Paper Out: 82
Cash Drawer Dialog 83
Printing using a printer driver (Printer Font) 84
Printing via a printer driver (System/Graphical/TrueType Font) 85
There are 3 Modes of printing. 88
Printing via POSPrinter OCX 92
Section 7: POSjet® 1500 Features/Specifications 93
Standard Features 93
Optional Features 93
Additional Supported devices and tools 94
Printer Test and Configuration Programs 94
Drivers and Utilities Available 94

Optional Printer Configurations 94
Color Configuration 94
Supported Emulations 94
Physical Printer Specifications 95
Auto-cutter (Partial Cut Option) 96
Auto-cutter Position 96
Sensors 96
Environmental Conditions 97
Relative Humidity 97
Accoustic Noise 97
Reliability 97
Power and Communication Specifications 98
Power Requirements 98
Parallel Interface 98
Parallel Pin Assignments 98
Parallel Signal Voltage and Current levels 99
RS-232 Serial Interface 99
Serial Port Features 99
Serial Pin Assignments 99
RS-232 Serial Interface Signal Voltage and Current levels 100
Display Pass Through 100
USB Interface 100
Cash Drawer Interface Description and Specifics 101
Printing Specifications 102
Character Pitch 103
Standard Print 104
Draft Font 104
Large Draft Font 104
Near Letter Quality (NLQ) Font 105
Rotated Print 105
Graphics Generation 106
Media Specifications 107
Media Specifications 107
Hewlett-Packard Inkjet Cartridges 107
Ink Cartridge Operating Conditions (maximum ratings) 107
Receipt Paper (one-ply receipt) 107
Paper and Core Diameter 107
Validation Form Requirements 109
Electrical Specifications 111
External Powered AC 111
External Powered DC 111
Cash Drawer 111
Interface Description 111
Section 8: Troubleshooting 112
Indicator Lights (LED) 112
The five POSjet® indicator lights are: 112
Power Indicator (LED) 112
Error Indicator (LED) 112
Paper Indicator (LED) 112
Cartridge Indicators (LED-left and right) 112
Fault Indicators 113
Three types of faults exist 113
Fully-recoverable and Status 113

Semi-recoverable 113
Non-recoverable 113
Recovery from Mechanical Errors 114
Non-Reportable Error 114
Programmer's Notes 114
Startup Troubleshooting 115
Operational Troubleshooting 116
Understanding Fault Indicators 116
Fully-recoverable and Status 116
Semi-recoverable 116
Non-recoverable 116
Indicator Light Blink Patterns 116
Keypad Indicator Troubleshooting Chart: General Problems 117
Keypad Indicator Troubleshooting Chart: Serious Problems 117
Correcting Common Operating Problems 119
Section 9: Programming Controls 121
Control Codes Overview 121
Nomenclature 121
Standard Emulation 122
IPCL Codes 122
EPOS Emulation 122
Citizen 3500 Emulation 122
Star Emulation 122
Ithaca® Microline Emulation 122
Application Development 122
Section 10: Ithaca Control Codes and Commands 123
PcOS Printer Control Codes 123
Quick PcOS Reference Chart 124
Vertical Motion 124
Character Pitch 124
Character Attributes 125
Electronic Journal 128
Low Level Paper Motion Control 129
Print/Paper Motion 129
Horizontal Motion Control 130
Vertical Motion Control 132
Character Pitch 136
Character Font 140
Character sets and Code Pages 142
OCR Characters 149
Character Attributes 150
Print Rotation Commands 154
Rotated Print Summary 155
Rotated Print Length Format 156
POSjet® 1500 Page Mode 157
How to use page mode 157
Setting the Page Size 157
Page Definition 158
Embedding Station Selects during Page Definition 158
Auto-cutter and Page mode 159
Mechanism commands in page mode 159
Stopping Page mode definition. 159

Printing the page 159
Check Printing 164
POSjet®1500 Graphics 165
Standard APA Graphics 165
Extended APA Graphics 166
Horizontal Graphics (Color Graphics) 168
Graphics Compression 169
User Store (Graphic Save) 170
Defining Macros 170
User-Store Commands 172
User Macros 175
Programming Considerations 175
Legacy Macro Commands 176
Bar Codes 177
Interleaved 2 of 5 177
Code 39 178
Code 128 178
UPC A 178
UPC E 178
EAN-13 178
EAN-8 179
Code 93 179
Codabar 179
POSjet® 1500 Validation Operation 181
Manual Validation. 181
Host Controlled Validation. 181
Host Controlled Validation. 181
Station Select Commands 183
Electronic Journal 184
Configuring the Electronic Journal 184
Initializing the Electronic Journal 185
Printing/Reporting and Resetting the Electronic Journal 185
Electronic Journal Configuration and Reporting Commands 185
Electronic Journal Entries 188
Journal mode 189
Carbon Copy Journal Mode 189
Auto Journal 191
Validation operation control 191
Miscellaneous Control 194
Remote Power Control 200
Documented Extended Control commands 200
Printer Status 202
Status Inquire 202
Serial and USB Mode Inquire 202
IEEE 1284 Mode Inquire 203
Dynamic Response Mode 203
Inquire Commands 203
Series 50 Compatibility Commands 211
ESC/POS™ Codes 212
Differences between Epson TM U325D and POSjet® 1500 212
Validation 212
Manual Validation. 212
EPOS Deviations 212
Undocumented Epson Commands 213

Real-time Status 213
Supported TM-U325D Commands 214
Supported TM-U325D Commands 215
Undocumented TM U325D Commands 216
Supported EPOS Commands 217
Supported EPOS Commands 219
TM-U325D and EPOS Command Descriptions 220
Print and Feed Commands 220
Line Spacing Commands 222
Character Commands 222
International Character Sets 224
Panel Button Commands 230
Paper Sensor Commands 231
Print Position Commands 233
Bit-Image Commands 235
Status Commands 236
Printing Paper Command 242
Bar Code Commands 244
Mechanism Control Commands 247
Miscellaneous Commands 248
Macro Function Commands 251
User-defined Memory Commands 253
Panel Button Commands 257
Paper Out/Low Sensor Commands 257

Section 11: POSjet® Color Graphics 259

Printing Graphics 259
Character Graphics 259
APA Graphics 262
Procedure for APA graphics: 262
Color Graphics 263
Procedure for color horizontal graphics: 264

POSjet® Universal Color Graphics 266
Print File Graphics 266
To generate a print file. 266
Store Graphics in the printer: 267
To Store a graphic in the printer 267
Print a stored graphic. 267
Generate a file to store graphics into a printer 267
How universal graphics is done 267
How to use IPCL commands in text strings 268
Load and store named graphic image 268
Recall and print stored named graphic image 268
Cautions 268
Universal Color Command Descriptions 269

Section 12: POSjet® Extended Printer Control 271

Appendix A: Common Operational Questions (FAQ's) 274

Appendix B 275

ASCII Code Table 275
Code Page Definition Table 276

Table of Tables

Table 1 Paper Low Setup 15
Table 2 Carriage Configurations 29
Table 3 Validation: Printer Settings and Requirements 31
Table 4 Extended Diagnostics 37
Table 5 How to Change Configuration Settings 40
Table 6 Configurable Options 47
Table 7 Single Color Printer-Color Configuration Details 48
Table 8 Two Color Ready Operation-Color Configuration Details 49
Table 9 Two Color Operation-Color Configuration Details 49
Table 10 Parallel-port Timing 56
Table 11 Color Bits Received 72
Table 12 Parallel Interface Pin-outs 98
Table 13 Serial Interface Pin Assignments 99
Table 14 Cash Drawer Connectors 101
Table 15 Print Speed Specifications 102
Table 16 Character Specifications 102
Table 17 Print Speed Specifications 102
Table 18 Possible Character Pitches 103
Table 19 Basic Cell Size for Draft, Large Draft, and NLQ Fonts 104
Table 20 Ink Cartridge Maximum Operating Conditions 107
Table 21 Standard Power Input Requirements 111
Table 22 Power Input Requirements Optional 24-volt DC Supplied from Host 111
Table 23 StartupTroubleshooting Help 115
Table 24 Keypad Indicators: General Problems 117
Table 25 Keypad Indicators: Serious Problems 118
Table 26 Troubleshooting: Keypad Lights Will Not Work 119
Table 27 Troubleshooting: Printer Will Not Print (Error Light ON) 119
Table 28 Troubleshooting: Printer Will Not Print (Error Light OFF) 119
Table 29 Troubleshooting: Printer Prints With Missing Dots in Characters 120
Table 30 Troubleshooting: Printer Sounds Like It's Printing But Nothing Prints 120
Table 31 Troubleshooting: Printer Will Not Load or Feed Paper 120
Table 32 Character Pitch 138
Table 33 Inter-character Spacing 139
Table 34 Language Table ID's 142
Table 35 Code Page Definition Table 144
Table 36 Euro Character Substitution Matrix 145
Table 37 OCR MA-3 149
Table 38 Max/Min Page Mode Height, Width, and Offsets 158
Table 39 Validation Form Requirements and Print Area 181
Table 40 Paper Sensor Commands 197
Table 41 Paper Sensor Commands 197
Table 42 Supported TM-U325D Commands 215
Table 43 Undocumented TM U325D Commands 216
Table 44 Supported EPOS Commands 217
Table 45 International Character Sets 224
Table 46 Character Code Pages 226
Table 47 Character Code Table 227
Table 48 Print Modes 228
Table 49 Rotation Modes 229
Table 50 Paper Sensor Commands 231
Table 51 Paper Sensor Commands 232
Table 52 Print Density Selection 235
Table 53 Automatic Status Back (ASB) Values for <n> 236
Table 54 Automatic Status Back (ASB) First Byte (Printer Information) 237

Table 55 Automatic Status Back (ASB) Second Byte (Error Information) 237
Table 56 Automatic Status Back (ASB) Third Byte (Paper Sensor Information) 238
Table 57 Automatic Status Back (ASB) Fourth Byte (Paper Sensor Information) 238
Table 58 Paper Sensor Status (<n> = 1, 49) 238
Table 59 Drawer Kick-out Connector Status (<n> = 2, 50) 238
Table 60 Values for the Status Function, <n> 239
Table 61 Printer Status (<n> = 1) 239
Table 62 Off-line Status (<n> = 2) 240
Table 63 Error Status (<n> = 3) 240
Table 64 Paper Roll Sensor Status (<n> = 4) 240
Table 65 Peripheral Status (<n> = 0, 48) 241
Table 66 Paper Status 242
Table 67 Bar Code System Based on <m> 244
Table 68 Bar Code System Based on <m> 245
Table 69 Printing Position of HRI Characters 245
Table 70 Font for Human Readable Interpretation (HRI) Characters 246
Table 71 Printer ID 248
Table 72 Type ID (<n> = 2 or 50) 248
Table 73 Peripheral Device Bit Definitions 249
Table 74 Macro Control Bit Definitions 252
Table 75 User-defined Bit-image Resolutions 256
Table 76 Common Operator's Questions (FAQ's) 274

Table of Figures

Figure 1 Keypad Buttons and Indicator Lights 2
Figure 2 Unpacking Instructions 6
Figure 3 Power and Communications Connections 7
Figure 4 Using the Cable Restraints 8
Figure 5 Connecting Serial Cables 9
Figure 6 Connecting Parallel Cable 10
Figure 7 Connecting the Cash Drawer Cable 11
Figure 8 Connecting the AC Power Cord (with power supply) 12
Figure 9 Connecting the DC Power Cord (no power supply) 13
Figure 10 Paper Low Setup (adjusting the sensor) 14
Figure 11 Installing the New Paper Roll 19
Figure 12 Cash Drawer Selection 22
Figure 13 Cash Drawer Shunt 23
Figure 14 Keypad Buttons and Indicator Lights 25
Figure 15 Typical POS System 51
Figure 16 Host to Printer Link 52
Figure 17 Printer Communications Buffer Flow 53
Figure 18 Parallel-port Data Timing 55
Figure 19 Parallel Port ACK Timing Options 56
Figure 20 Serial Port Flow Control Using DTR 59
Figure 21 XON/XOFF Serial Port Flow Control 60
Figure 22 Example of Character Graphics 68
Figure 23 Example Commands for a Sample Receipt 69
Figure 24 Sample Receipt 70
Figure 25 Receipt with graphics 74
Figure 26 Printer Dimensions 95
Figure 27 Receipt Printable Area 96
Figure 28 Environmental Conditions:Typical Operating Range 97
Figure 29 Cash Drawer Pin Assignments 101
Figure 30 Draft 12 x 12 Font 104

Figure 31 Large 12 x 14 Font 104
Figure 32 NLQ 24 x 16 Font 105
Figure 33 Paper Roll and Paper Core Diameters 108
Figure 34 Form Print Zones 109
Figure 35 Page Definition 157
Figure 36 Page Mode entry Orientations 158
Figure 37 Validation Print Zone 182
Figure 38 Check Printing 182
Figure 39 Example of Character Graphics 259
Figure 40 Example Commands for a Sample Receipt 260
Figure 41 Sample Receipt 261
Figure 42 Receipt with graphics 265

Table of Flow Charts

Flow Chart 1 Serial Buffer Operation 61
Flow Chart 2 Print Controller Using Data 62
Flow Chart 3 Inquire Flow 64

Section 1: Setup and Installation Procedures

By following the instructions in this section, the POSjet® 1500 will be ready to accept commands and successfully interface with your system in just a few minutes. Follow the steps below when setting up your printer.

Overview of Printer Controls ..... pg. 25

Step 1: Unpack the Printer ..... pg. 6
Step 2: Connect Power and Communications ..... pg. 7
Step 3: Paper Low Setup ..... pg. 14
Step 4: Loading Ink Cartridges and Paper ..... pg. 16

Overview of Printer Controls

Leaving the 1500 Connected to a Power Source

The POSjet® 1500 Printer uses Hewlett-Packard ink jet print cartridges. Unlike consumer ink jet print cartridges, the HP print cartridge does not need to be capped when not in use. Consequently, the POSjet® 1500 is ready to print at all times. The HP cartridge does not need to be sealed. However, the ink jet cartridge must have periodic usage to maintain its functionality. The printer does this by cleaning the excess ink from the face of the cartridge ("wiping") and firing ink into a reservoir to clean the print jets ("spitting"). The printer performs these functions as transparently to the host application as possible. However, the printer cannot perform these basic maintenance procedures if the power to the printer is removed.

Do not unplug the printer from it's power source. Instead, turn the printer to the STANDBY/OFF mode by pressing and releasing the * Button located on the front face of the printer. Doing this prepares the ink cartridges for periods of inactivity. Turning the printer to STANDBY/OFF maximizes the amount of time that ink cartridge(s) can be left without being used. When the printer is turned to STANDBY/OFF, it can sit unattended for period of time. To bring the printer back out of STANDBY/OFF mode, simply press the * Button. This will bring the printer into OPERATIONAL/ON mode, which should be confirmed by the POWER INDICATOR LIGHT becoming illuminated.

Operating the Keypad Controls

The keypad contains 3 buttons and 6 indicator lights. The * Button is used in conjunction with the keypad controls to perform operating tasks and is located on the front of the printer. The cover open button on the left side of the console opens the printer's paper cover.

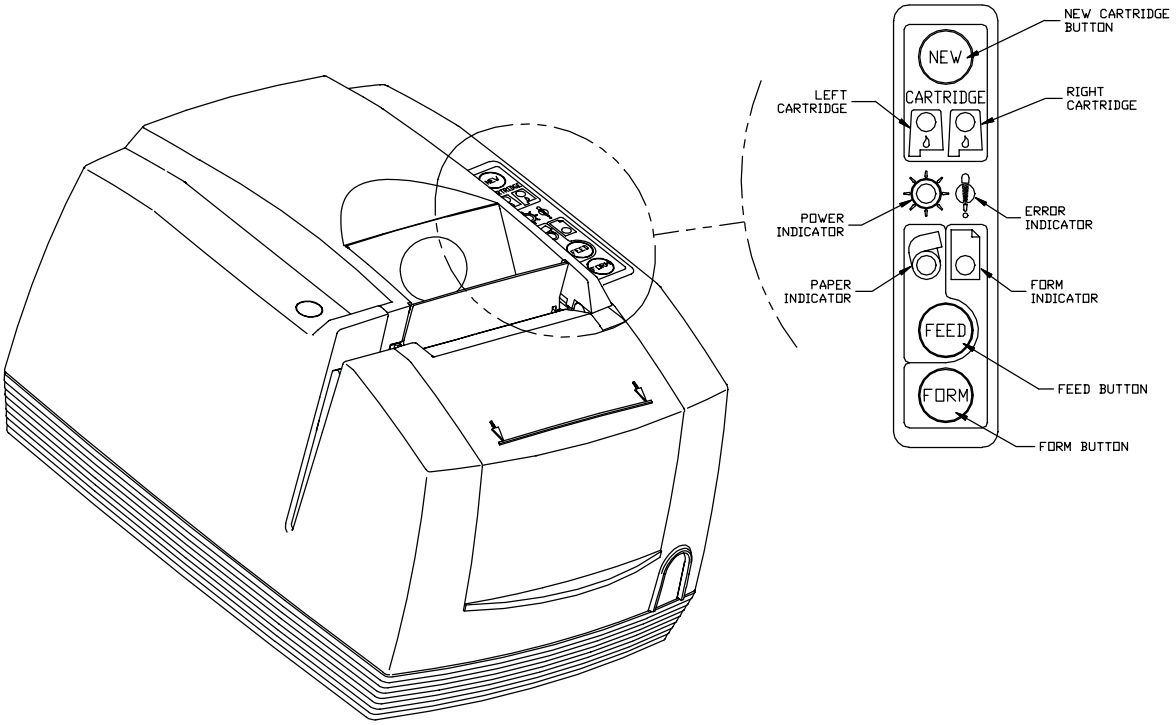

Figure 1 Keypad Buttons and Indicator Lights

Button Function Descriptions:

The primary functions of each of the buttons are described below. These buttons may also have alternate functions when the printer is in self-test and configuration modes.

* Button

The * Button is located on the front of the printer. Since the POSjet® 1500 has been designed to remain connected to a power source at all times, the * Button does not disconnect power to the printer, but instead switches the printer between OPERATIONAL/ON and STANDBY/OFF modes. When the printer is in the OPERATIONAL/ON mode, the green POWER INDICATOR LIGHT will be illuminated. None of the keypad indicator lights are illuminated when the printer is in the STANDBY/OFF mode.

The printer will always remember the current mode that it is in when power has been disconnected and then re-connected. For example, if the printer is in STANDBY/OFF mode and the power cord is unplugged and re-connected to the printer, it will remain in STANDBY/OFF mode. If the printer is in OPERATIONAL/ON mode and the power cord is unplugged and re-connected to the printer, it will remain in OPERATIONAL/ON mode.

NEW CARTRIDGE Button

The NEW CARTRIDGE Button works with the LEFT AND RIGHT INK CARTRIDGE INDICATOR LIGHTS to allow an operator to monitor and replace ink cartridges as ink levels become low. The primary functions of the NEW CARTRIDGE Button are:

Cartridge Status Monitoring

Ink usage is monitored by the printer. When the ink supply is low, the indicator light for the left or right cartridge will blink. After replacing the cartridge(s), press the NEW CARTRIDGE Button to inform the printer that a new cartridge has been installed.

Note: The printer cannot distinguish between a new, full cartridge and a used cartridge. When a cartridge is replaced, the printer will reset the ink status to full when the NEW CARTRIDGE Button is pressed. Used cartridges should be discarded to assure that they are not re-installed into the printer

Printing Cartridge Status

Press the NEW CARTRIDGE Button to print the current status of the ink cartridges. This function is only available when the printer is in OPERATIONAL/ON mode, with paper and cartridges installed, and covers closed. It will not remove an ink low warning unless the cartridge has been replaced.

Printing Ink Remaining Status

Pressing the NEW CARTRIDGE Button once without changing the cartridge will print the ink status. It will not remove the ink low warning unless the cartridge is removed and replaced while the low indication is being displayed. If the cartridge is replaced with a used cartridge, the NEW CARTRIDGE Button should not be pressed.

FEED Button

The FEED Button is used to advance paper. If an inserted form is present in the printer, the FEED Button will move the form in a upward direction. If no form is present, the receipt paper will be advanced.

Pressing the FEED Button momentarily, will feed one line at a time. Pressing and holding the FEED Button will feed paper continuously until it is released. The receipt paper may be fed in the reverse direction by pressing and holding the NEW CARTRIDGE Button and the FEED Button at the same time. The reverse feed function is mostly used while fixing a paper jam.

Form Button

The FORM Button is used for inserted form operations. Pressing the FORM Button with no form inserted in the printer activates the automatic form loading function. The printer will flash the FORM INDICATOR LIGHT and wait for a form to be placed in the validation slot. If a form is already present in the printer, pressing the FORM button will move the form in a downward direction.

Open Cover Button

The Open Cover Button is used to access the rear paper roll compartment and is located on the left side of the printer's outer console.

Indicator Light Descriptions

POWER INDICATOR LIGHT	Indicates printer activity and non-recoverable errors.
ERROR INDICATOR LIGHT	Indicates problems and probability of recovery.
PAPER INDICATOR LIGHT	Indicates paper status (paper low and paper out).
FORM INDICATOR LIGHT	Indicates validation/inserted form status
LEFT CARTRIDGE INDICATOR LIGHT	Indicates ink levels of left cartridge.
RIGHT CARTRIDGE INDICATOR LIGHT	Indicates ink levels of right ink cartridge.

The descriptions below reflect the normal uses of the keypad indicator lights. These indicators are also used during self-test and errors modes to convey additional information.

Power Indicator Light (LED)

The POWER INDICATOR LIGHT becomes active when the printer is in the OPERATIONAL/ON mode.

Error Indicator Light (LED)

The ERROR INDICATOR LIGHT becomes active when a problem is detected by the printer. The ERROR INDICATOR LIGHT, along with the other indicators may be used to determine the cause of the problem.

Paper Indicator Light (LED)

The PAPER INDICATOR LIGHT is used to communicate the amount of paper remaining in the printer. When the paper supply has been exhausted, the printer will stop, and the PAPER and ERROR INDICATOR LIGHTS will illuminate. When paper is reloaded, the indicator lights will be extinguished and the printer will resume operation. If the POSjet 1500 is equipped with the optional paper low feature, the PAPER INDICATOR LIGHT will flash when the paper roll diameter decreases below a preset minimum. This indication is a warning only, the printer will continue to operate normally until the paper supply is exhausted.

Form Indicator

The FORM INDICATOR LIGHT is used during form validation operations. The FORM INDICATOR LIGHT blinks to alert the operator that the printer is waiting for a form to be inserted/removed in the printer. The FORM INDICATOR LIGHT will change to a steady ON condition when a form is present in the printer.

Left and Right Cartridge Indicator Lights (LED)

The printer has two ink cartridge indicator lights that display the status of the ink cartrides. The indicator light will blink slowly when the ink level in the respective cartridge falls below a preset, programmable level. It is a warning only, the printer will continue to operate without intervention. When ink cartridge(s) are removed, or the ink cartridge is defective, the corresponding light will blink at a faster rate. Printer operation is inhibited until the cartridge is replaced.

Step 1: Unpack the Printer

Be sure to save the box and packing materials in case you need to send the printer in for service. Transact Technologies is not responsible for damaged return items that are not packaged in original shipping material. Refer to "Return Materials Authorization and Return Policies", on page iv for information on what to do if you have to return your printer for repair.

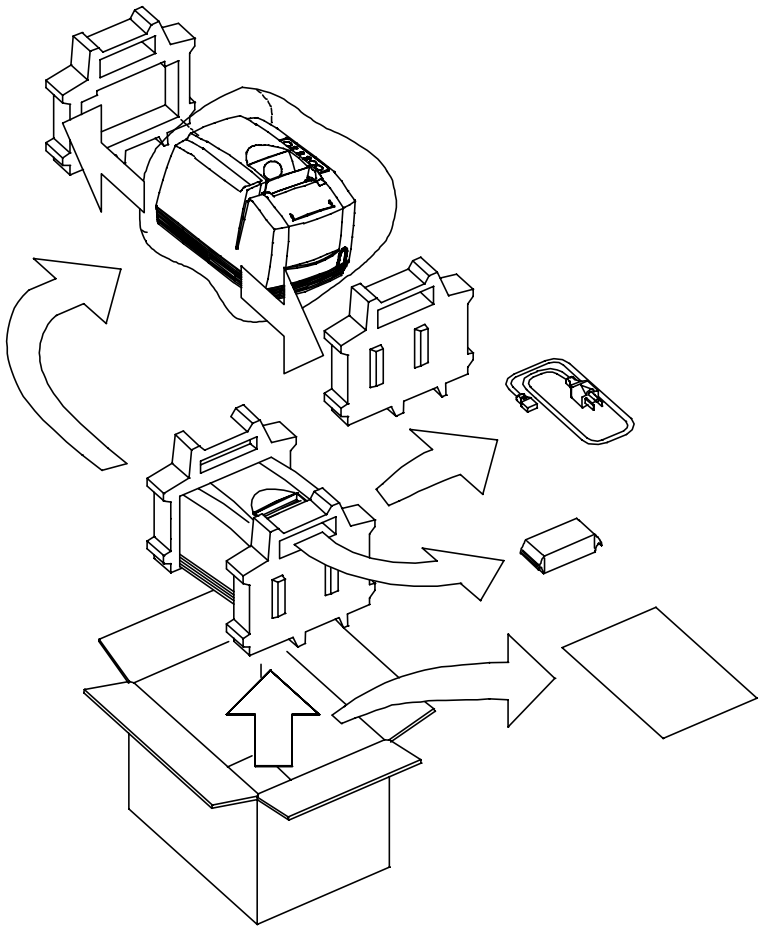

Figure 2 Unpacking Instructions

1. Open the box and remove the printer and all items. Check to make sure that all items are present.

- **POSjet® 1500 Printer**
- **Ink Cartridge(s)**
- **Paper Roll (located under the paper cover)**
- **PowerPocket™ Power Supply: located in cabinetry base (optional)**
- **AC Power Cord (optional)**
- **Configuration Summary Receipt**

2. Separate the printer from the packing material. Reverse steps when repacking for return shipment.
3. Check the printer for any signs of damage. If the printer or any parts are damaged, report it to your supplier and shipper immediately.

Step 2: Connect Power and Communications

Installation Overview

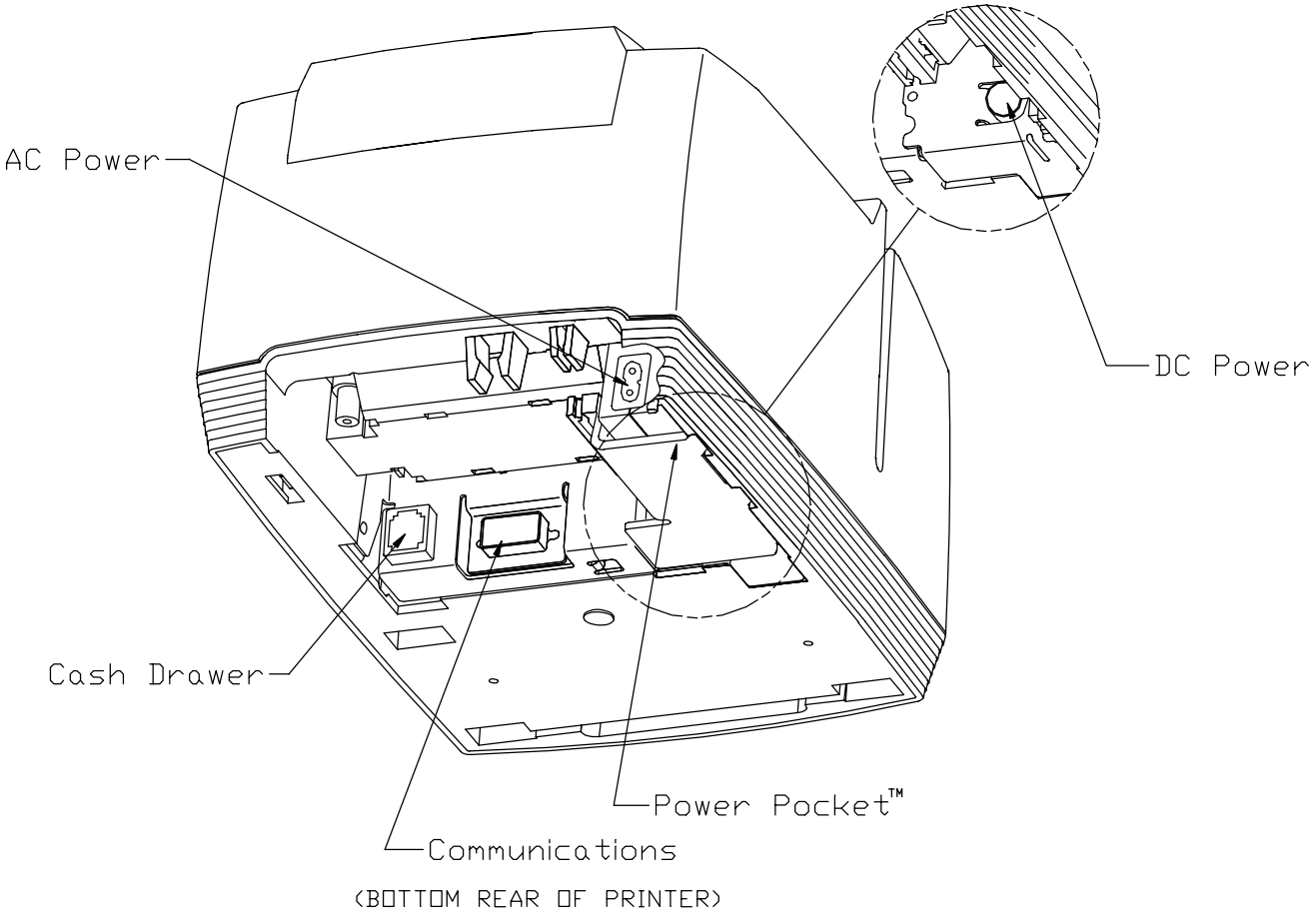

Figure 3 Power and Communications Connections

Three cables are required to be connected to the printer

- Power
- Communications
- Cash Drawer

Using the Cable Restraints

Cable restraints are developed to protect against accidental unplugging of the printer while it is in use. Be sure to properly route the communications cable using the restraints provided on the back of the printer.

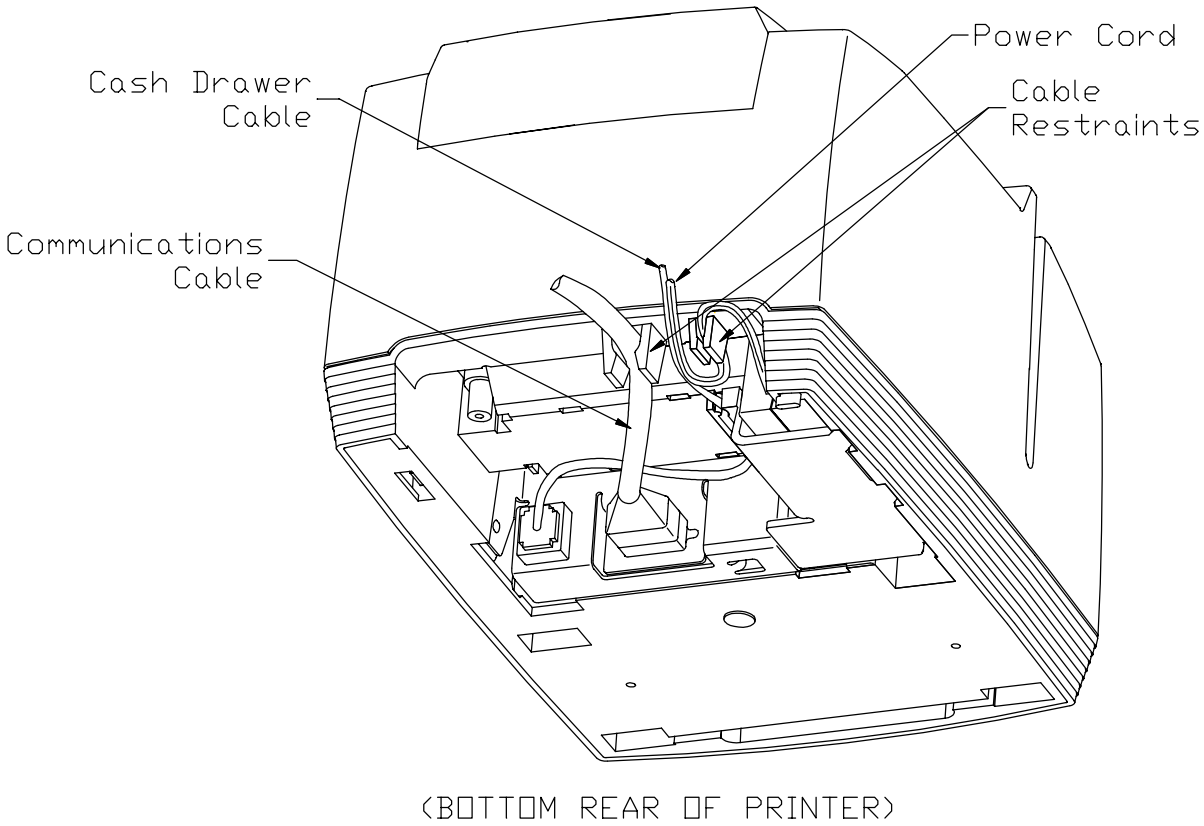

Figure 4 Using the Cable Restraints

Connecting the Communication Cable

The POSjet® 1500 may be equipped with a number of different communications interface cards.

These interfaces include:

RS-232 Serial with 9-pin connector
RS-232 Serial with 25-pin connector
IEEE1284 Parallel with 25-pin connector (IEEE1284-A)
IEEE1284 Parallel with 36-pin Centronics style connector (IEEE1284-B)
USB

Connect the appropriate communications cable to the printer as shown in the following figures. Cables are provided by your dealer, the system installer or are available through TransAct. If you are unsure of the interface installed in your printer, refer to "Verify the communications interface card" on page 21.

Connecting Serial Cables

1. Disconnect all power from the printer and host system or personal computer.

2. Connect the 9/25-pin Serial Interface Cable to the connector located on the back of the printer.

3. Tighten the two mounting screws on each side of the cable connector.

4. Route the Communication Cable through the Cable Restraint and connect the cable to your host system.

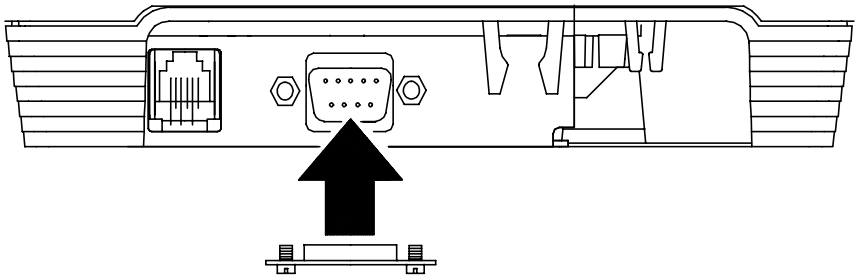

Figure 5 Connecting Serial Cables

Connecting Parallel Cables

1. Disconnect all power from the printer and host system or personal computer.
2. Connect the 25/36-pin Parallel Interface Cable to the connector located on the back of the printer.
3. Tighten the two mounting screws on each side of the cable connector (25-pin only). Or, engage the locking clips (36-pin only).
4. Route the Communication Cable through the Cable Restraint and connect to your host system.

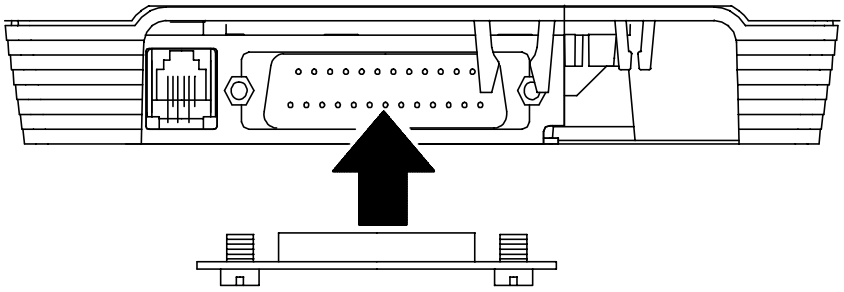

Figure 6 Connecting Parallel Cable

Connecting USB Cables

Note: the USB connector can be "hot plugged". The power does not need to be disconnected.

1. Connect the USB cable to the connector located on the back of the printer.
2. Route the Communication Cable through the Cable Restraint and connect to your host system.

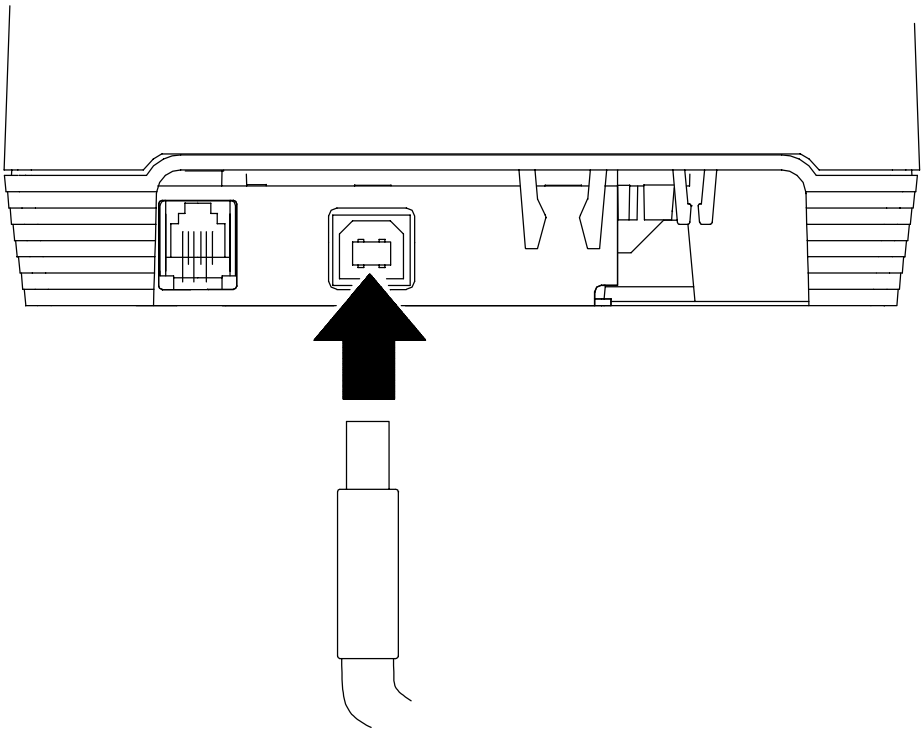

Connecting the Cash Drawer

The POSjet® 1500 printer can be configured to operate with cash drawers designed to work with printers from different manufacturers. This configuration is preset at the factory and is identified by means of a label affixed to the bottom of the printer. The POSjet® 1500 currently supports Ithaca, Epson, and Star compatible cash drawers.

CAUTION: The printer and cash drawer configurations must be the same to ensure proper operation. If the label is missing or does not match your cash drawer configuration, refer to "Verify the Cash Drawer Interface" on page 22.

Connecting Cash Drawer Cable to the Printer

1. Disconnect all power from the printer and host system or personal computer.

2. Orientate the printer so you are looking at the rear underside of the unit and locate the small Cash Drawer Connector to the left of the Communication Connector.

3. Connect the Cash Drawer Cable to the connector located on the back of the printer, making sure that the Cash Drawer Cable snaps into place.

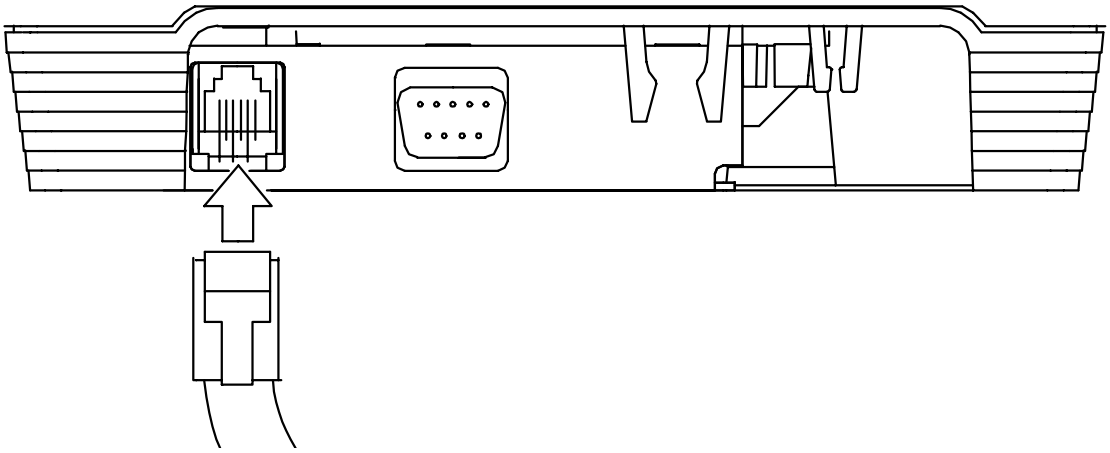

Figure 7 Connecting the Cash Drawer Cable

The POSjet® 1500 Printer may be powered from an external 24 Vdc power source, or may be equipped with a factory installed PowerPocket power supply. Refer to the specification section for DC power connector specifications.

Connecting the Power Cord (with power supply)

1. Orientate the printer upside-down and find the POSjet's power supply's power socket.

2. Locate the power cord and connect it to the power socket (power supply) located on the back of the printer and to an external power outlet. The socket-outlet shall be installed near the equipment and shall be easily accessible.

3. Route the power cord through the cable restraints. Refer to the drawing below to see how to route the cord. Failure to use the cable restraints may result in the printer becoming accidently unplugged during operation.

4. Set the printer into OPERATIONAL/ON mode by pressing the * Button. The printer takes approximately 1.5 seconds to begin operation.

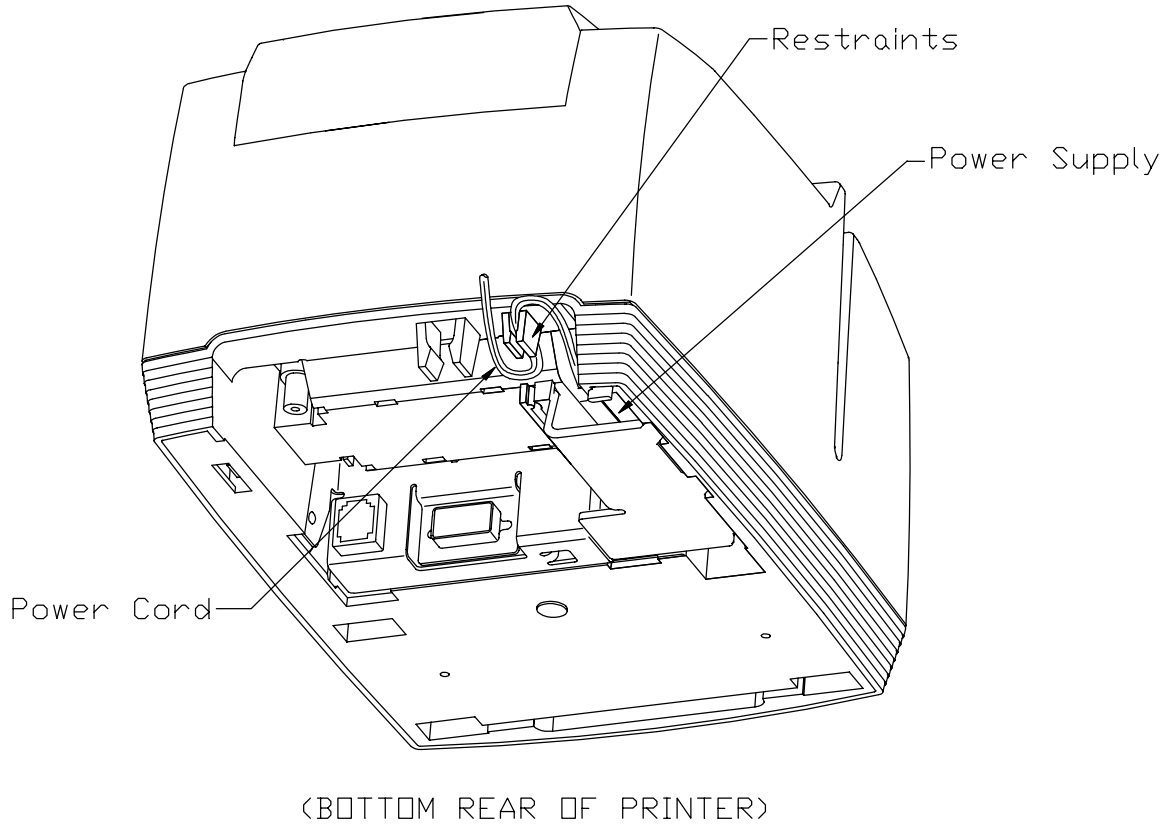

Figure 8 Connecting the AC Power Cord (with power supply)

Connecting the DC Power Cord (no power supply)

1. Orientate the printer upside-down and find the DC power socket.

2. Locate the DC power cord and connect it to the Interface Card's power socket, then route the cord through the cable restraint. Failure to use the cable restraints may result in the printer becoming accidently unplugged during operation.

3. Set the printer into OPERATIONAL/ON mode by pressing the * Button. The printer takes 1.5 seconds to begin operation.

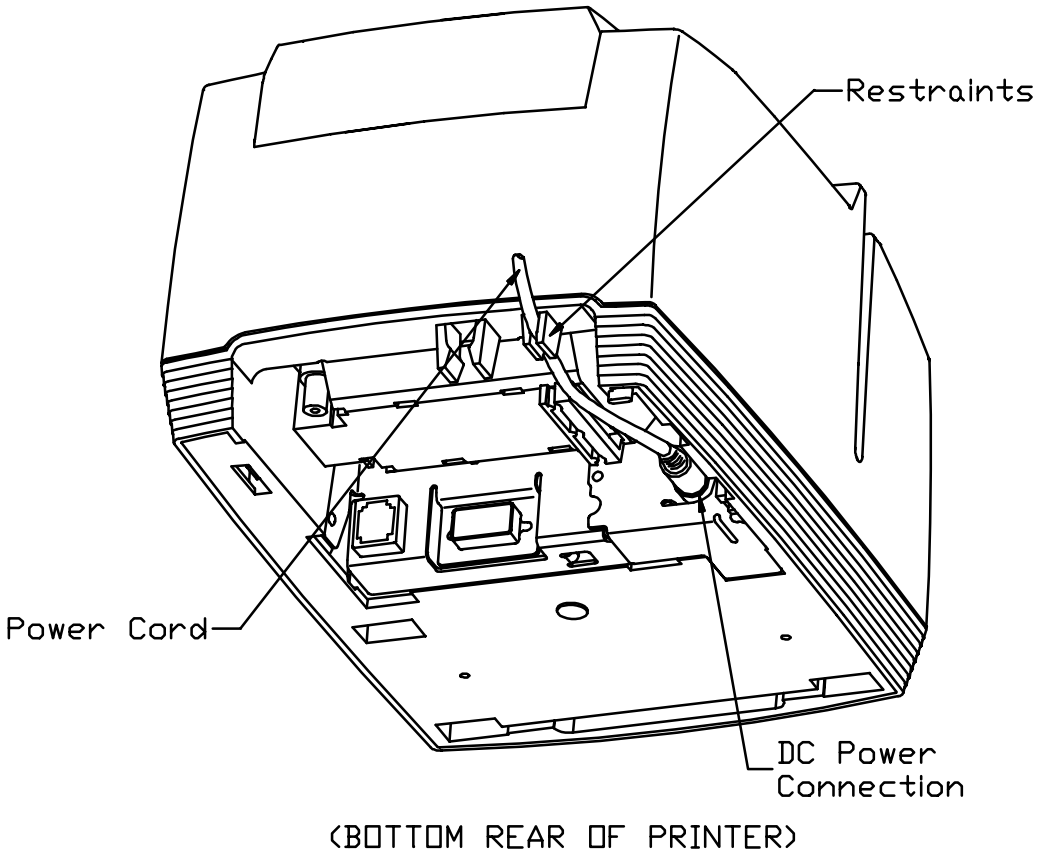

Figure 9 Connecting the DC Power Cord (no power supply)

Step 3: Paper Low Setup

A receipt paper-low sensor is provided as an optional feature. This adjustable paper-low assembly allows the printer to detect when the paper roll is between 1.42" and 0.885" (36.1mm and 22.5mm) in diameter, and to issue a paper low status to the application. All printers are shipped with a mid-position setting that can be adjusted up or down with 1 to 3 full turns of the adjustment screw. In general, the paper low setup does not need to be changed from the factory setting.

Adjusting the Paper-Low Sensor

1. Use the cover open button to release the rear paper cover and locate the paper low adjustment access hole.
2. Refer to Table 2 on the following page for specific adjustment settings.
3. Turn the screw to control the amount of paper that is remaining after paper low has occurred.

CAUTION: When the sensor touches the plastic of the Cabinetry Base (lower limit only), the sensor should not be adjusted any further. Over adjustment will cause stress in the sensor material and will decrease its longevity.

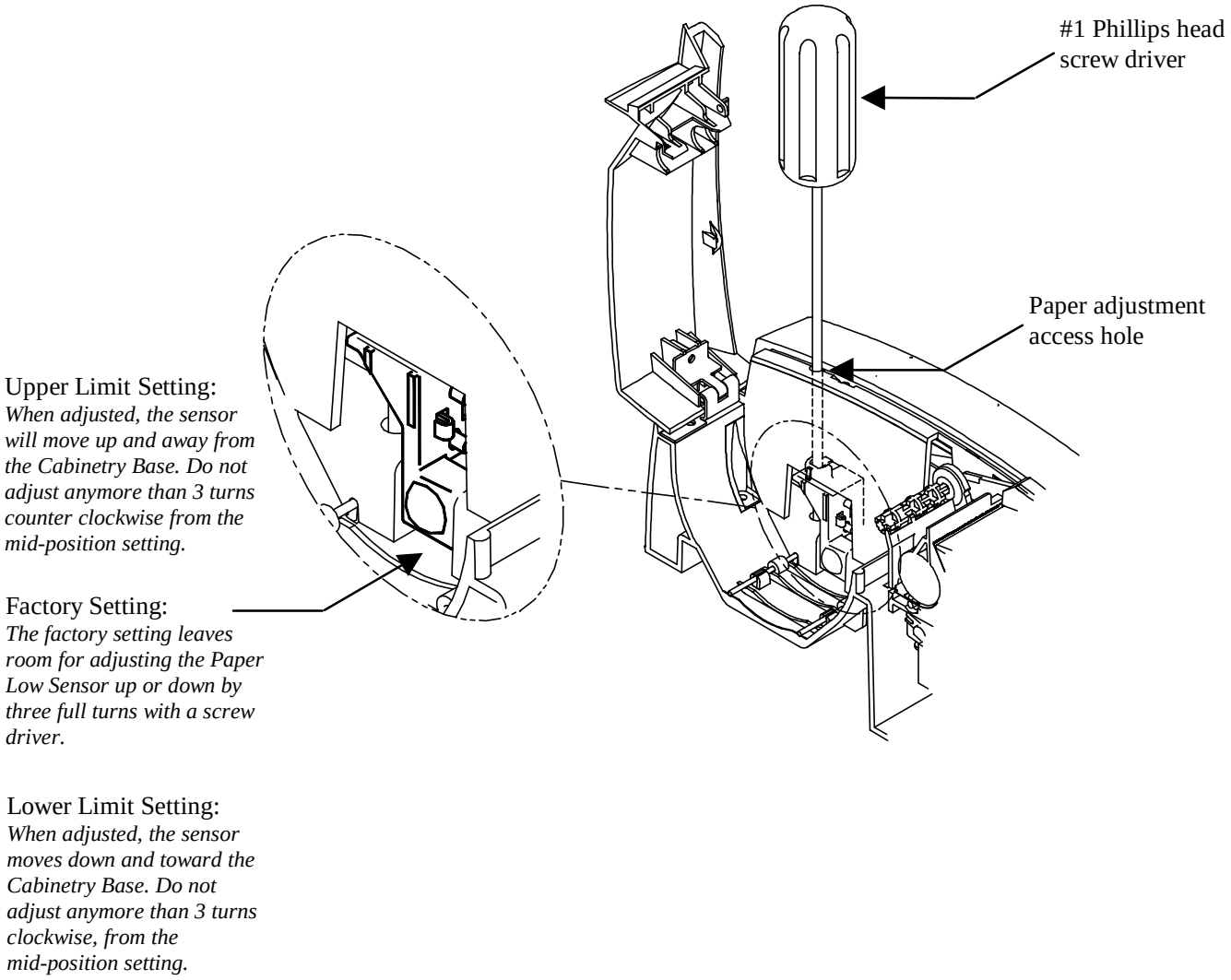

Figure 10 Paper Low Setup (adjusting the sensor)

Paper Low Adjustment Requirements

Use the following table to decide how much paper you want to remain after paper low sensing has occurred. TransAct's expected results are based on paper and paper roll with these specifications. Refer to "Paper and Core Diameter" on page 107 for paper measurements.

Paper Low Adjustment Settings	Approximate Paper Remaining (in feet)	Paper Roll Diameter
UPPER LIMIT: 3 turns **(counter clockwise)**	**24'**	1.420" (36mm)
2 turns *(counter clockwise)*	22'	1.375" (34.9mm)
1 turns *(counter clockwise)*	16'	1.250" (31.7mm)
FACTORY SETTING	**12'**	1.175" (29.8mm)
1 turn *(clockwise)*	7'	1.050" (26.6mm)
2 turns *(clockwise)*	3.5'	.950" (24.1mm)
LOWER LIMIT: 3 turns **(clockwise)**	**1.25'**	.885" (22.4mm)

Table 1 Paper Low Setup

Step 4: Loading Ink Cartridges and Paper

Note 1: FIRST TIME INSTALLATION: An ink cartridge(s) can be found in the pouch that shipped with your printer.

NOTE 2: When installing new ink cartridges and a new paper roll for the first time, you may leave the cover open until you have installed the ink cartridges, and the paper roll.

Installing Ink Cartridges

Use the * Button to set the printer into OPERATIONAL/ON mode before you install the ink cartridges. Confirm that the printer is in this mode by checking that the POWER INDICATOR LIGHT is activated.

Caution: Do not touch the ink cartridge's metallic connector surface with your fingers. Doing so will contaminate the connector and produce sub-standard print quality.

1. Remove the new ink cartridge(s) from their sealed pouch and remove the Mylar tape from the face of the new ink cartridge. (Holding the cartridge by the tab will ensure a clean installation.)

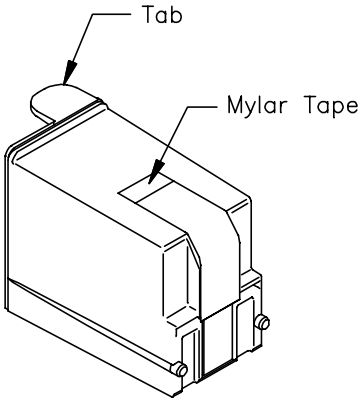

2. Press the Open Cover Button to release the rear paper cover from the console, then swing the rear paper cover towards the back of the printer. (Opening the printer's front cover will also open the rear paper cover.)

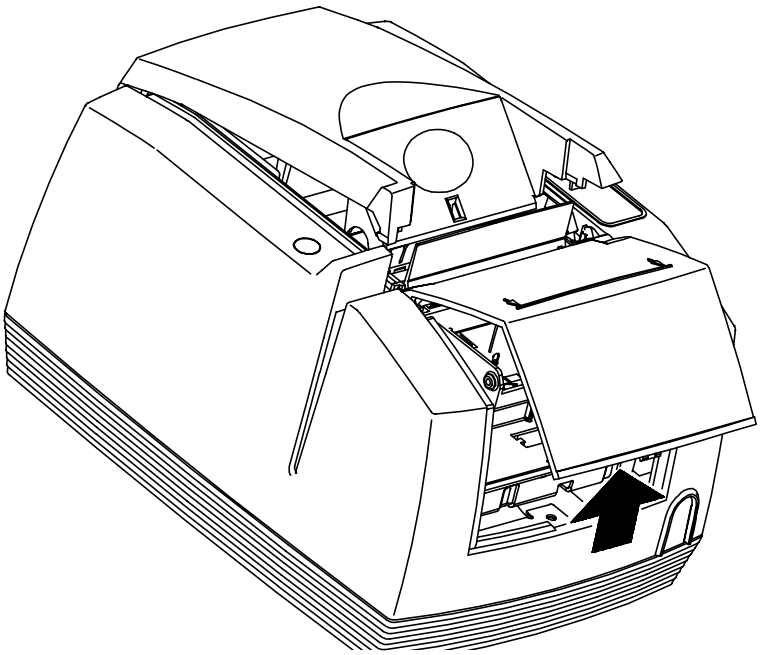

NOTE: If paper is present, ensure that the receipt is torn off prior to opening the front cover.

3. Pull down the blue cartridge latch/latches (1) and remove the old ink cartridges (2).

4. Place the new ink cartridge(s) into the carriage (3). Hold the cartridges by their tab to ensure a clean installation. (Install the cartridge so that the tab is facing the front of the printer.) Close blue latch/latches (4).

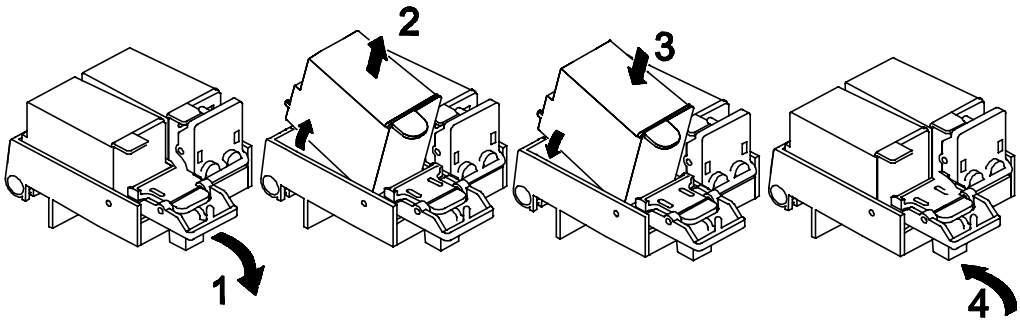

5. Close all of the printer's covers and press the NEW CARTRIDGE Button. Doing this initializes the ink status on the newly inserted ink cartridges.

NOTE: If you expereince any problems, refer to "Printer Color Configuration" on page 48 to confirm that your printer has the proper configuration settings.

Installing a New Paper Roll Using Insta-Load™

Before you attempt to load the paper roll, make sure that the printer is plugged in and that the printer is set to the OPERATIONAL/ON mode. !IMPORTANT!: Paper cannot be loaded for the first time without first installing the ink cartridge(s). A small receipt roll is supplied with the printer.

ALWAYS check that the paper core is aligned with the right edge of the paper roll as installed.

1. Use the Open Cover Button to release the rear paper cover; then swing it towards the back of the printer to reveal the paper compartment. (First time installers will already have the cover open from installing ink cartridges.)

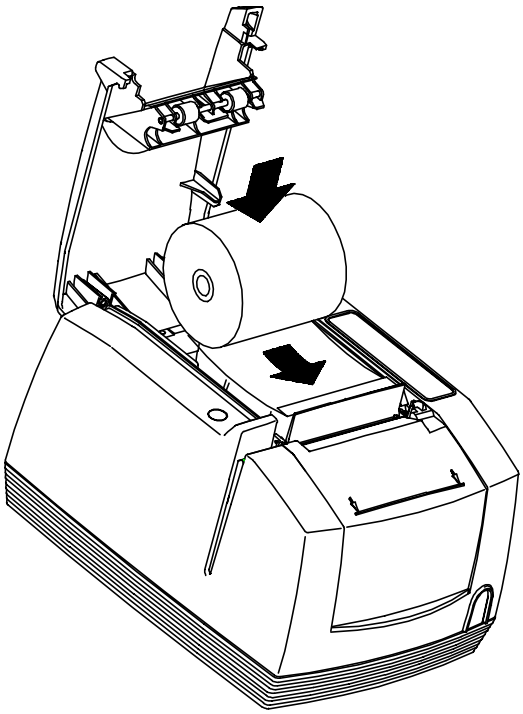

2. IMPORTANT! Insert the new paper roll so that the paper unwinds from the bottom of the roll, and that the leading edge of the paper rests on top of the front cover. Make sure the paper does not extend beyond the molded paper stop mark on the front cover.

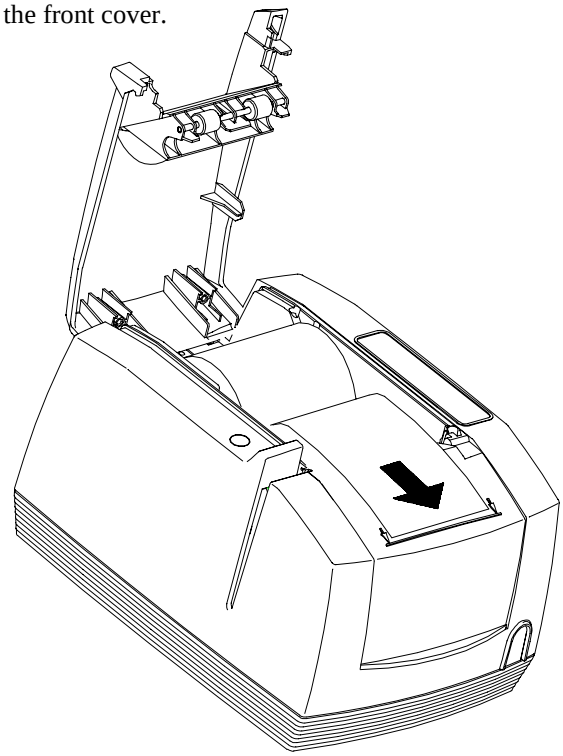

3. Close the rear paper cover; making sure that it snaps into place. The printer will automatically load the paper through the feeding mechanism. If the paper does not feed, repeat the steps.

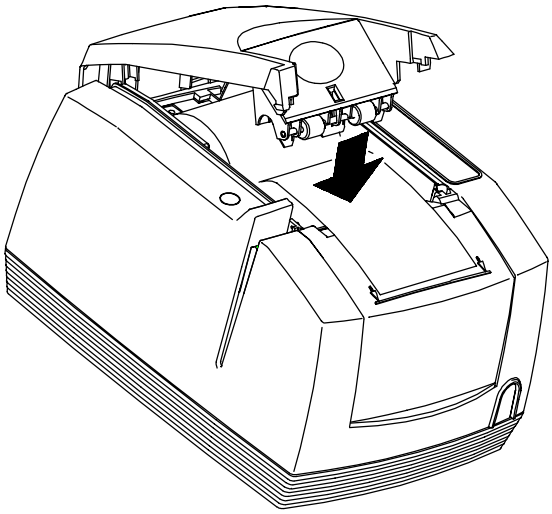

Figure 11 Installing the New Paper Roll

STEP 5: Printing the Configuration Summary Receipt

This printer has been shipped with a pre-printed, Configuration Summary Receipt that shows how the printer has been configured at our factory. This Configuration Summary Receipt can be found in the paper compartment of your printer. Save this receipt for future reference. In the event that you need to view your printer's configuration settings, but do not have your Configuration Summary Receipt, you can print a new one using the printer's self-test mode. Use the configuration summary receipt to compare printer configuration settings to your system requirements. Specific attention should be given to ensure that the emulation and the communications link are properly configured. If they do not match the settings of your system, the printer may appear inoperative.

Follow the steps below to print a new Configuration Summary Receipt:

Placing the Printer In Self-Test Mode (printing the Configuration Summary Receipt)

The NEW CARTRIDGE Button is used to enter the POSjet's self-test mode. To place the POSjet® in self-test mode, first be sure that a paper roll is loaded and that the POWER INDICATOR LIGHT is off.

1. If the POWER INDICATOR LIGHT is illuminated, press and release the * Button to turn the printer into STANDBY/OFF mode.
2. Press and hold the NEW CARTRIDGE Button.
3. While holding the NEW CARTRIDGE Button, press and release the * Button.
4. When the red, ERROR INDICATOR LIGHT blinks, release the NEW CARTRIDGE Button.
5. You are now in self-test mode. Read the directions on top of the printed receipt to cycle through the menu options.
6. Select the "TEST-PRINT CONFIGURATION" menu option.

Exiting Self-Test Mode

Exit Self-Test mode at anytime by pressing the * Button to place the printer back into OPERATIONAL/ON mode.

At this point, your printer should be completely installed and ready to accept commands. Refer to our on-line Operator's Guide for additional information about setup troubleshooting, printer specifications, and operational information.

Matching Printer Configuration Settings to your System

If you are experiencing inconsistent printing operation, or if the printer appears to be nonresponsive, several of the printer configuration settings need to be set to match the requirements of your system.

Parallel Printer
Emulation
Carriage Return Options

Serial Printer
Emulation
RS-232 Serial Interface (baud rate)
Carriage Return Options

TransAct recommends that ONLY THE ABOVE SETTINGS BE ALTERED and does not recommend that these re-configurations be made by anybody but a trained service technician who has successfully completed training on the POSjet® 1500. Please remember that these settings are only a few of the possible configurable options. If you continue to experience incompatibility issues after changing these settings to match your system, contact TransAct's Technical Support Department for assistance.

STEP 6: Verifying the Printer Setup

Before you install a POSjet® 1500 Printer into your system, you should verify that the printer is configured as required by your system. There are four parts to this verification process.

1. Verify that the communications interface card is the correct one.
2. Verify that the Cash drawer interface is configured correctly
3. Verify that the Power connection is correct.
4. Verify that the firmware in the printer is configured correctly.

Verify the communications interface card

There are three basic types of interface cards and each has variations. Make sure your printer has the correct interface card.

Parallel Interface

- Centronics 36-pin interface
- 25-pin D shell

Serial Interface

- 9-pin D shell interface
- 25-pin D shell interface

USB Interface

- Standard 4-pin

It is easy to distinguish most of the interface cards besides the 25-pin Serial and 25-pin Parallel interface cards. To determine what interface is installed refer to the configuration receipt shipped with the printer, or enter configuration mode and look at the verification print out. If a serial interface card is installed, the print out will refer to the RS-232 Serial Interface. If the parallel interface card is installed, the print out will refer to the Parallel interface.

Changing Interface Cards

The interface card on the POSjet® 1500 Printer can be changed in the field.

In most cases, interface cards are interchangeable without altering the printer firmware. However, you may have to load new firmware and/or boot loader before you change the interface cards. Check with Technical Support for firmware compatibility between interface cards before ordering.

Removing the Old Interface Card

1. Turn over the printer. Take care not to allow the cover to open or the paper to fall.
2. Disconnect the current communications and cash drawer cables.
3. If equipped, unsnap the power supply retainer and slide out the power supply.
4. Disconnect the power supply from the interface card.
5. Remove the interface retaining screw.
6. Slide the interface crad sideways-towards the power supply pocket-and remove it.

MAKE SURE the cash drawer is configured correctly. (See the next page)

Installing the new interface card

Configure the cash drawer jumpers. See "Verify the Cash Drawer Interface" on page 22.

1. Slide the interface card into the printer. Make sure the interface card sits flush with the retaining screw mounting bracket. The retaining screw should also line up with the hole in the new interface card.
2. Install the retaining screw.
3. Reconnect the power supply to the new interface card.
4. Reinstall the power supply into the PowerPocket™ and reattach the retainer.
5. Connect the communications interface card, and the cash drawer's cables.
6. Turn over the printer, and reconnect the power.

Verify the Cash Drawer Interface

The printer is shipped from the factory with a cash drawer interface label on the bottom of the printer. You should always verify that the cash drawer you are using matches the printer's cash drawer interface label. If there is no cash drawer label, you should remove the communications interface card and verify the setting.

There are many vendors of cash drawers. If you are unsure what the cash drawer interface is, contact the cash drawer vendor for more information.

If you find that the cash drawer does not match the printer, you may change the printer's cash drawer interface configuration as shown on page 111. If the cash drawer interface no longer matches the label on the printer, please remove the label.

Matching the Cash Drawer Interface

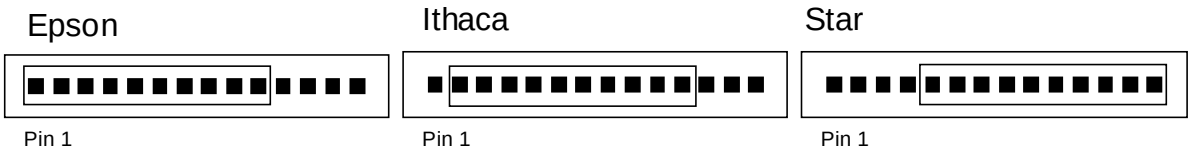

Figure 12 Cash Drawer Selection

The Cash drawer shunt setting is printed on the communications interface card. When you change the communications interface card, it is very important that the cash drawer configuration of the new interface card matches your cash drawer.

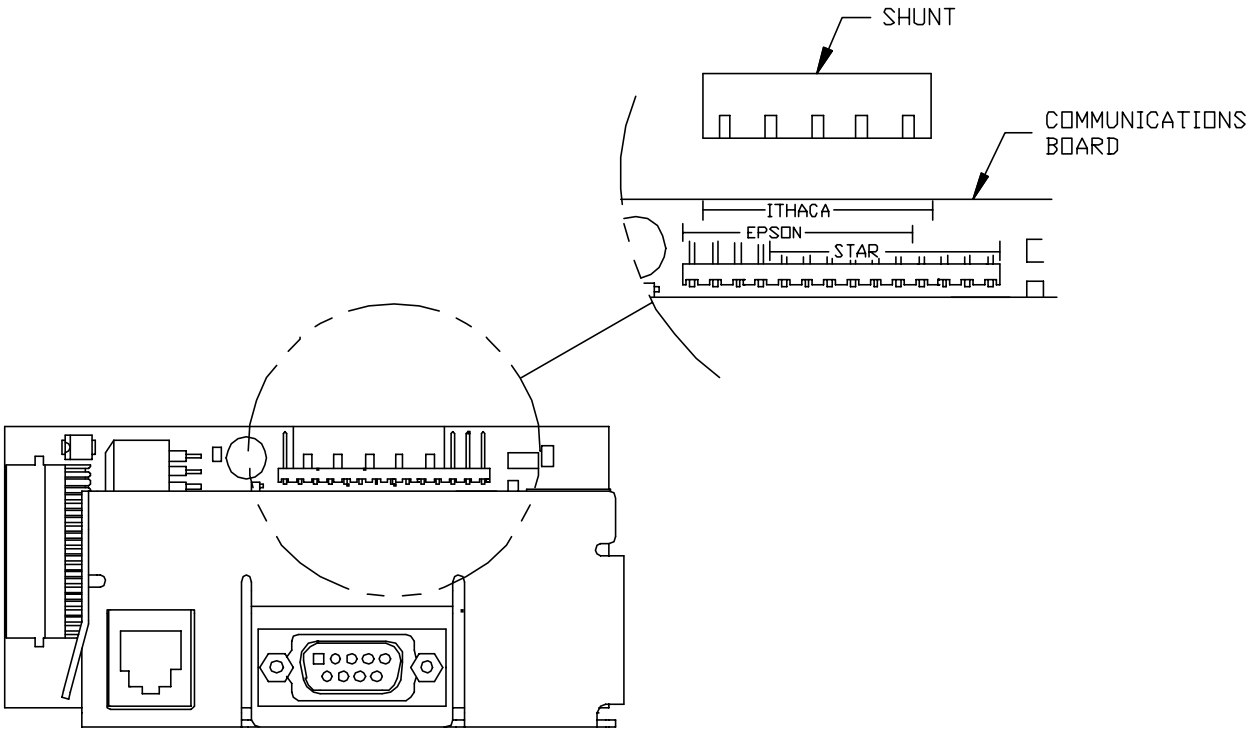

Figure 13 Cash Drawer Shunt

See “Cash Drawer interface descriptions”, on page 111 to help determine what interface you need.

To reconfigure the interface card, remove the 5-position shunt and reposition it to the position that corresponds to the cash drawer you have.

Section 2:
Operational Information

Overview of Printer Controls ..... pg. 25
Using Ink Cartridges ..... pg. 25
Using Validation: Form Insertion and Orientation ..... pg. 31
Printer Self Testing and Diagnostics ..... pg. 34
Understanding Configuration Mode ..... pg. 38
Printer Color Configuration ..... pg. 48

Overview of Printer Controls

Leaving the 1500 Connected to a Power Source

The POSjet® 1500 Printer uses Hewlett Packard thermal ink jet print cartridges. Unlike consumer ink jet print cartridges, the HP print cartridge does not need to be capped when not in use. Consequently, the POSjet® 1500 is ready to print at all times. The HP cartridge does not need to be sealed. However, the cartridge is still an ink jet cartridge and must have periodic usage to maintain its functionality. The printer does this by cleaning the excess ink from the face of the cartridge ("wiping") and firing ink into a reservoir to clean the print jets ("spitting"). The printer performs these functions as transparently to the host application as possible. However, the printer cannot perform these basic maintenance procedures if the power to the printer is removed.

Do not unplug the printer from it's power source. Instead, turn the printer to the STANDBY/OFF mode by pressing and releasing the * Button located on the front face of the printer. Doing this prepares the ink cartridges for periods of inactivity. Turning the printer to STANDBY/OFF maximizes the amount of time that ink cartridge(s) can be left without being used. When the printer is turned to STANDBY/OFF, it can sit unattended for extended periods of time. To bring the printer back out of STANDBY/OFF mode, simply press the * Button. This will bring the printer into OPERATIONAL/ON mode, which should be confirmed by the POWER INDICATOR LIGHT becoming illuminated.

Operating the Keypad Controls

The keypad contains 3 buttons and 6 indicator lights. The * Button is used in conjunction with the keypad controls to perform operating tasks and is located on the front of the printer.

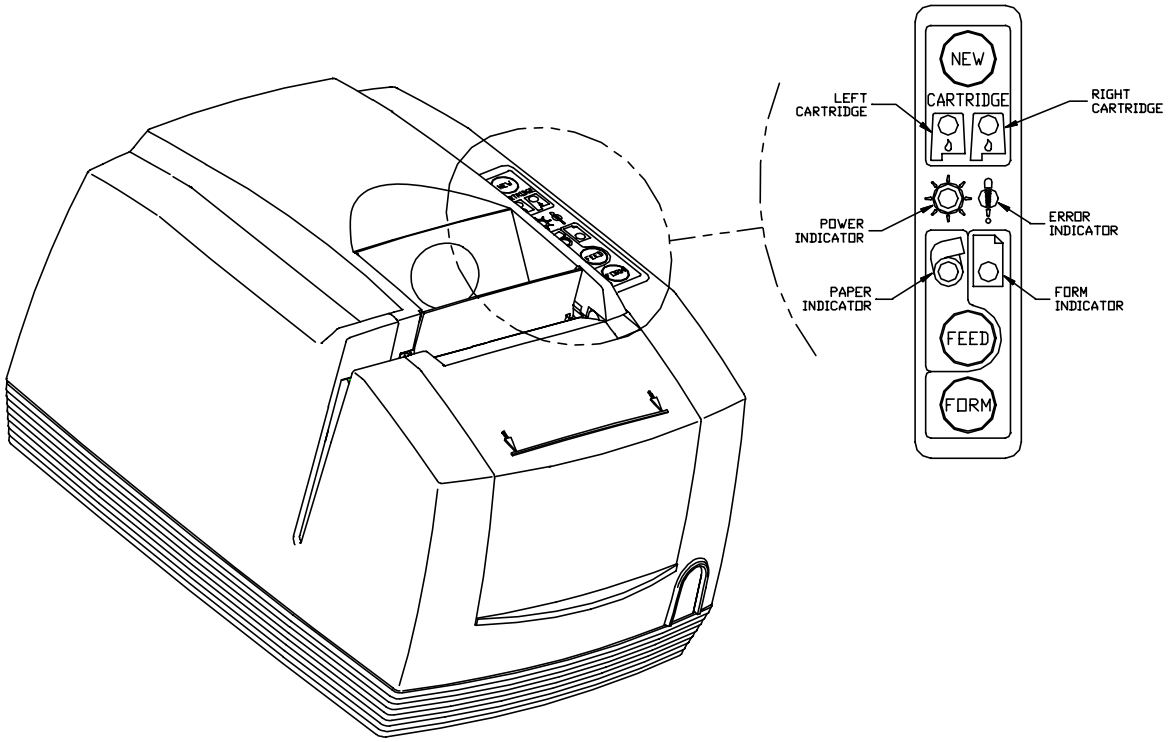

Figure 14 Keypad Buttons and Indicator Lights

Button Function Descriptions:

The primary functions of each of the buttons are described below. These buttons may also have alternate functions when the printer is in self-test and configuration modes.

* Button

The * Button is located on the front of the printer. Since the POSjet® 1500 has been designed to remain connected to a power source at all times, the * Button does not disconnect power to the printer, but instead switches the printer between OPERATIONAL/ON and STANDBY/OFF modes. When the printer is in the OPERATIONAL/ON mode, the green POWER INDICATOR LIGHT will be illuminated. None of the keypad indicator lights are illuminated when the printer is in the STANDBY/OFF mode.

The printer will always remember the current mode that it is in when power has been disconnected and then re-connected. For example, if the printer is in STANDBY/OFF mode and the power cord is unplugged and re-connected to the printer, it will remain in STANDBY/OFF mode. If the printer is in OPERATIONAL/ON mode and the power cord is unplugged and re-connected to the printer, it will remain in OPERATIONAL/ON mode.

NEW CARTRIDGE Button

The NEW CARTRIDGE Button works with the INK CARTRIDGE INDICATOR LIGHTS to allow an operator to monitor and replace ink cartridges as ink levels become low. The primary functions of the NEW CARTRIDGE Button are:

Cartridge Status Monitoring

Ink useage is monitored by the printer. When the ink supply is low, the indicator light for the left or right cartridge will blink. After replacing the cartridge(s), press the NEW CARTRIDGE Button to inform the printer that a new cartridge has been installed.

Note: The printer cannot distinguish between a new, full cartridge and a used cartridge. When a cartridge is replaced, the printer will reset the ink status to full when the NEW CARTRIDGE button is pressed. Used cartridges should be discarded to assure that they are not re-installed into the printer

Printing Cartridge Status

Press the NEW CARTRIDGE Button to print the current status of the ink cartridges. This function is only available when the printer is in OPERATIONAL/ON mode, with paper and cartridges installed, and covers closed. It will not remove an ink low warning unless the cartridge has been replaced.

Printing Ink Remaining Status

Pressing the NEW CARTRIDGE Button once without changing the cartridge will print the ink status. It will not remove the ink low warning unless the cartridge is removed and replaced while the low indication is being displayed. If the cartridge is replaced with a used cartridge, the NEW CARTRIDGE Button should not be pressed.

FEED Button

The FEED Button is used to advance paper. If an inserted form is present in the printer, the FEED Button will move the form in a upward direction. If no form is present, the receipt paper will be advanced.

Pressing the FEED Button momentarily, will feed one line at a time. Pressing and holding the FEED Button will feed paper continuously until it is released. The receipt paper may be fed in the reverse direction by pressing and holding the NEW CARTRIDGE Button and the FEED Button at the same time. The reverse feed function is mostly used while fixing a paper jam.

Form Button

The FORM Button is used for inserted form operations. Pressing the FORM Button with no form inserted in the printer activates the automatic form loading function. The printer will flash the FORM INDICATOR LIGHT and wait for

a form to be placed in the validation throat. If a form is already present in the printer, pressing the FORM button will move the form in a downward direction.

Indicator Light Descriptions

POWER INDICATOR LIGHT	Indicates printer activity and non-recoverable errors.
ERROR INDICATOR LIGHT	Indicates problems and probability of recovery.
PAPER INDICATOR LIGHT	Indicates paper status (paper low).
FORM INDICATOR LIGHT	Indicates validation/inserted form status
LEFT CARTRIDGE INDICATOR LIGHT	Indicates ink levels of left cartridge.
RIGHT CARTRIDGE INDICATOR LIGHT	Indicates ink levels of right ink cartridge.

The descriptions below reflect the normal uses of the keypad indicator lights. These indicators are also used during self-test and errors modes to convey additional information.

Power Indicator Light (LED)

The POWER INDICATOR LIGHT becomes active when the printer is in the OPERATIONAL/ON mode.

Error Indicator Light (LED)

The ERROR INDICATOR LIGHT becomes active when a problem is detected by the printer.The ERROR INDICATOR LIGHT, along with the other indicators may be used to determine the cause of the problem.

Paper Indicator Light (LED)

The PAPER INDICATOR LIGHT is used to communicate the amount of paper remaining in the printer. When the paper supply has been exhausted, the printer will stop, and the PAPER and ERROR INDICATOR LIGHTS will illuminate. When paper is reloaded, the indicator lights will be extinguished and the printer will resume operation. If the POSjet 1500 is equipped with the optional paper low feature, the PAPER INDICATOR LIGHT will flash when the paper roll diameter decreases below a preset minimum. This indication is a warning only, the printer will continue to operate normally until the paper supply is exhausted.

Form Indicator

The FORM INDICATOR LIGHT is used during form validation operations. The FORM INDICATOR LIGHT blinks to alert the operator that the printer is waiting for a form to be inserted/removed in the printer. The FORM INDICATOR LIGHT will change to a steady ON condition when a form is present in the printer.

Left and Right Cartridge Indicator Lights (LED)

The printer has two ink cartridge indicator lights that display the status of the ink cartrides. The indicator light will blink slowly when the ink level in the respective cartridge falls below a preset, programmable level. It is a warning only, the printer will continue to operate without intervention. When ink cartridge(s) are removed, or the ink cartridge is defective, the corresponding light will blink at a faster rate. Printer operation is inhibited until the cartridge is replaced.

Using Ink Cartridges

The POSjet® 1500 is available in single or dual cartridge configurations. Several physical differences exist between the single and dual cartridge printers. The most obvious is the ability to install two ink cartridges in a dual cartridge printer. The second and less obvious is the dual wiper in a dual cartridge printer. For the printer to operate correctly, the firmware needs to know the number of installed ink cartridges, and the color of the second cartridge.

Carriage Configuration	Left Pen	Right Pen	Wiper	Configurations
Single	Black	Not Used	Fixed	Black Only
Dual (Color Ready)	Black	Not Used	Dual	Black - None
Dual	Black	Red	Dual	Black - Red
Dual	Black	Green*	Dual	Black - Green
Dual	Black	Blue*	Dual	Black - Blue
Dual	Black	Custom*	Dual	Black - Red, Green, or Blue[1]

Table 2 Carriage Configurations

It is not possible to configure the printer to operate with two black cartridges. If a second black cartridge is installed, the printer will not maintain it, and the cartridge will dry out and become unusable. Do not store a spare cartridge in the second position. Once the seal is broken, the cartridge will be exposed to the air, and should be placed in an operational printer.

Care of Ink Cartridges

Ink cartridges should be stored in the sealed HP packaging. Once a print cartridge is unsealed, it should be placed in an operating printer. If a printer is taken out of service, the print cartridge should be removed and discarded. ***Never ship a printer by any means with a print cartridge installed.*** The pressure variations can cause the cartridge to become unprimed and/or purge. If you are going to ship a printer, remove and discard the print cartridge or cartridges.

[1] Custom second colors, when available, should select the closest primary color.

* Not yet available.

Determining Ink Cartridge Status

The POSjet® 1500 has been designed to monitor ink consumption rates and report ink levels to the user via a printable ink status. To print out a ink status receipt press the NEW CARTRIDGE button.

The POSjet® 1500 is designed to read only full cartridges. Using used cartridges will negate the printer's ability to monitor ink consumption rates effectively. If the NEW CARTRIDGE button is pressed with a newly inserted used cartridge in place, the printer will reset the ink level counter. Due to undetermined ink levels in the used cartridge, the printer's counter will not be able to define the amount that the cartridge is actually holding. TransAct does not recommend replacing a spent cartridge with anything but a new ink cartridge that is approved and compatible with the printer. TransAct recommends that used cartridges be discarded after they are removed from the printer.

Refer to the following information as a guide for determining when ink cartridges need replacing.

Keypad Status	Indicator Light (LED)	Status and Sequence
Right Cartridge Low	Power LED	ON
	Error LED	OFF
	Paper LED	OFF
	Left Cartridge LED	OFF
	Right Cartridge LED	1 BLINK
Left Cartridge Low	Power LED	ON
	Error LED	OFF
	Paper LED	OFF
	Left Cartridge LED	1 BLINK
	Right Cartridge LED	OFF
Both Cartridges	Low Power LED	ON
	Error LED	OFF
	Paper LED	OFF
	Left Cartridge LED	1 BLINK
	Right Cartridge LED	1 BLINK
Right Cartridge Removed	Power LED	ON
	Error LED	ON
	Paper LED	OFF
	Left Cartridge LED	OFF
	Right Cartridge LED	ON
Left Cartridge Removed	Power LED	ON
	Error LED	ON
	Paper LED	OFF
	Left Cartridge LED	ON
	Right Cartridge LED	OFF

Using Validation: Form Insertion and Orientation

Validation Orientation

The POSjet® 1500 accepts validation forms in both portrait and landscape orientations. Each of the two different orientations have specific print zones, and print character spacing requirements. Regardless of the insertion orientation, the minimum and maximum media size that can be accepted by the printer are as follows:

Form Requirements

Landscape Mode

Form size (Min.): 2.75” width x 2.75” height (69.8 mm x 69.8 mm).
Form Size (Max): 8.5”width x 11” height (215.9 mm x 279.4 mm).
Maximum Print Area: 2.5” width x 1.5” height
#Validation Lines: Max 9 lines.

Portrait Mode

Form size (Min.): 2.75” width x 2.75” height (69.8 mm x 69.8 mm).
Form Size (Max): 2.75” width x 8.75” height (69.8 mm x 222.3 mm).
Maximum Print Area: 2.5” width x 7.8” height

In addition to the Min/Max size requirements, it is very important to use paper having a thickness between .003" to .0047" (.076 mm. to .119 mm.). Using paper that is thicker than this may cause printing inconsistencies, and /or paper jams. Refer to “Validation Form Requirements” on page 109 for a complete listing of specifications regarding the use of validation forms.

Printer Settings

Form Orientation	Character Line Spacing	Number of printed character lines
Portrait (vertical)	10 character lines per inch	51 (on 6 inch form)
Portrait (vertical)	10 character lines per inch	78 (on 8.75 inch form)
Landscape (horizontal)	6 character lines per inch	9
Landscape (horizontal)	6 character lines per inch	12

Table 3 Validation: Printer Settings and Requirements

Inserting Validation Forms

The POSjet® 1500 is designed to run validation either by using application software, or manually. Forms can be inserted in either landscape or portrait orientation. Regardless of the orientation, the insertion process is the same. The POSjet® 1500 can accept forms with measurements between 2.75" x 2.75" (69.8mm x 69.8mm) and 8.5" x 11" (215.9mm x 279.4mm).

1. Send appropriate control commands from your system to initiate the validation process or press the FORM Button to enter validation mode.

2. When the FORM INDICATOR LIGHT starts blinking, insert the validation paper into the validation paper inlet using the right edge (form stop) of the validation paper inlet as a guide.

3. When the validation sheet is detected by the sensor, the FORM INDICATOR LIGHT changes from blinking to steady ON. The paper is automatically drawn into the printer, and printing begins.

4. When the FORM INDICATOR LIGHT begins to blink again after printing, remove the validation paper.

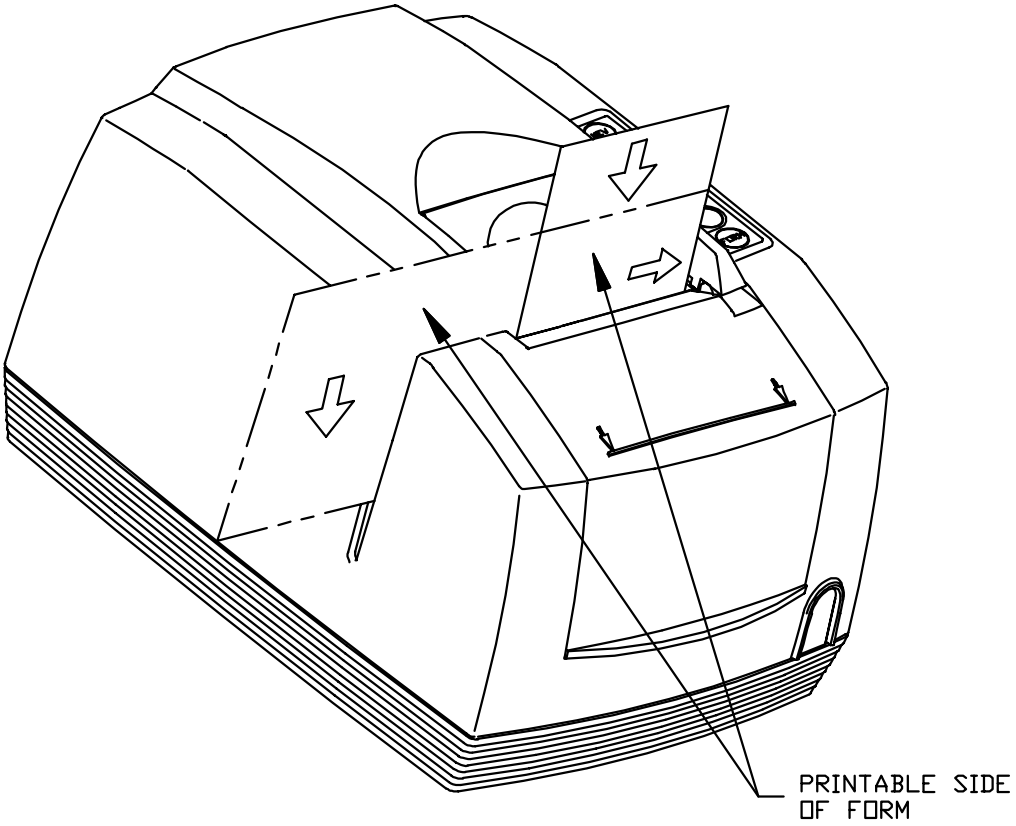

Printable Side of Form

Because the printer cartridge is located at the front of the printer, the side of the inserted form that is facing the front end of the printer is where the printing will always occur. Always insert forms so that the side of the form that you want the printing to occur on is facing you and the front of the printer.

Preventing and Clearing Validation Jams

Inserted forms should not be touched during the printing, or ejection process. Pressing or pulling the paper during ejection may cause the validation process to jam. If a jam condition occurs clear it as described below:

Removing a Validation Jam

If a validation jam occurs, and the top of the form is still visible in the form insertion area, remove the form by simply pressing and holding the FEED Button. If the top of the form is not visible in the form insertion area, it can need to be removed manually.

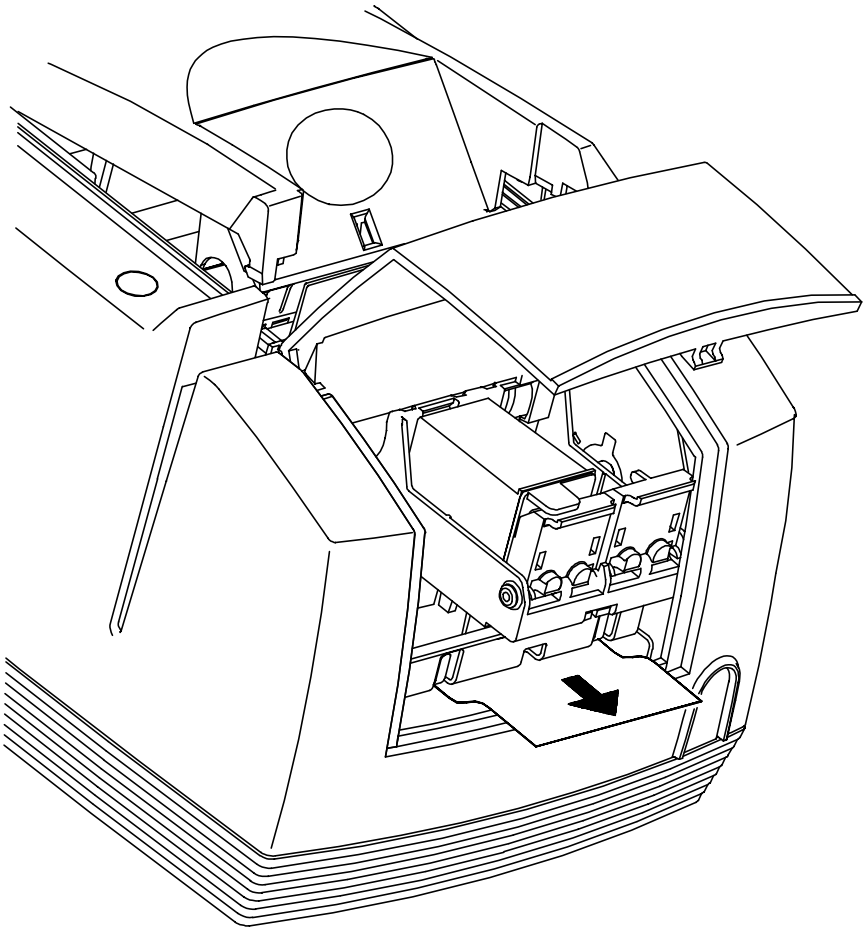

Removing a Validation Jam Manually

1. Open the printer's front cover.
2. Insert your index finger underneath the ink carriage and evenly pull the form out toward you until it is completely removed from the printer.
3. Close the printer's covers and resume operation.

Printer Self Testing and Diagnostics

Printer Self-Testing

The POSjet® 1500 has been designed to perform several self-tests and will also allow a technician to access the printer's configuration settings. It is important to insure that the printer will perform a self-test. This isolates printing problems to something other than the operation of the printer itself. The POSjet® has a total of ten self-test options with four designed to be useful when performing on-site evaluations. These four tests are the only options that should be used to test your printer. The other six testing options are used for printer demonstrations and factory setup by TransAct. Use the following four test options when trying to correct a printing problem.

Use the following testing options when beginning to troubleshoot and repair the POSjet® 1500.

TEST-Receipt

The receipt test is the primary test option to use when determining if the printer is functioning correctly. The receipt test is mostly used during the early stages of troubleshooting to eliminate the possibility that the problem is occurring with the printer. If the printer experiences a failure, and the ERROR INDICATOR LIGHT is activated, call TransAct's Ithaca Facility's Technical Support Department.

TEST-Print Configuration

The print configuration test is a quick and easy way for you to see how your printer has been configured at the factory without actually having to enter into configuration mode. A large percentage of initial installation and setup problems can be attributed to the printer's configuration not matching the user's system settings. Using this test will show you the current configuration settings of the printer.

TEST-Validation

Validation test will load and validate the back of a check or inserted form. Nine lines of validation information will be printed.

TEST-Check Test

Check test will perform the check insertion process.

Disregard the following options when cycling through the menu:

The following six self-test options are only extended functionality tests and do not need to be run in order to determine if the printer is running properly. These test options are only used for printer demonstrations and factory setup.

TEST-Graphics
TEST-Print Specs
TEST-Pyramid
TEST-Burn in
TEST-Bar Codes
TEST-Rolling ASCI

Placing the Printer In Self-Test Mode

The NEW CARTRIDGE Button may be used to enter the POSjet's self-test mode. To place the POSjet® in self-test mode, be sure that a paper roll is loaded. The POWER INDICATOR LIGHT should not be illuminated when trying to place the printer in self-test mode.

1. Press and release the * Button to switch the printer into STANDBY/OFF mode. (The POWER INDICATOR LIGHT will be not be illuminated.)
2. Press and hold the NEW CARTRIDGE Button.
3. While holding the NEW CARTRIDGE Button, press and release the * Button.
4. When the red, ERROR INDICATOR LIGHT blinks, release the NEW CARTRIDGE Button.
5. Follow the directions printed on the receipt to cycle through and select the desired TEST option.

Exiting Self-Test Mode

Exit Self-Test mode at anytime by pressing the * Button to place the printer back into OPERATIONAL/ON mode.

Remote Power Down

The POSjet® 1500 has a command that instructs it to turn the printer into STANDBY/OFF mode. When the command is issued, the printer performs print cartridge maintenance and enters STANDBY/OFF. Unlike pushing the * Button, remote power down mode leaves the communications active. All commands except the exit power down command are ignored.

If the * Button is pressed after the power down command is issued, the printer will reactivate. If power is lost after the power down command is issued, the printer will remember it is in STANDBY/OFF mode, but will not reactivate the communications link. The * Button must be pressed to restart the printer.

Self-Test Hints and Suggestions

- If the printer fails to complete or enter into self-test mode, disconnect it from the application system.
- Contact TransAct's Ithaca Facility's Technical Support Department if self-test mode fails in any way.

Level 0 Diagnostics

Level 0 diagnostics always and only run at power up. They are not run as part of OFF recovery.

Level 0 diagnostics perform the following tasks:

Cold Power On

1. Basic System Integrity
2. Vector Integrity
3. RAM Test
4. Flash Boot Loader Integrity
5. Flash Firmware Integrity
6. Start Normal Firmware
7. Verify Configuration Integrity
8. Interface Card Configuration
9. User-store Integrity
10. Start Kernel, Verify Multitasking, Start Tasks

    Once the kernel is running, the following tests must pass to allow operation. However, if any test fails (except the knife home test), the remaining tests will generate recoverable faults and normal operation will start as soon as the fault is cleared. These tests are also run when operation is resumed from OFF.
11. Cartridge Integrity
12. Cover Closed Check
13. Knife Home (if installed)
14. Carriage Home
15. Schedule Cartridge Maintenance
16. Paper Present
17. Place Printer On-line, Start Normal Operation

Firmware Test

The flash test has two phases. The first phase determines that the boot loader is accurate, and the second verifies that the printer firmware is correct. All tests, up to and including the boot loader test, generate non-recoverable errors when they fail. The power must be removed from the printer, and the printer must be returned for service. If the boot loader is intact, but the main firmware is bad, the printer automatically enters boot loader mode. The firmware will re-loaded into the printer.

Boot Loader Mode

The boot loader cannot be entered during normal operation. Boot loader mode can only be entered in one of two ways. One, when Level 0 Diagnostics finds that the firmware check CRC is bad, or two, manually. To manually enter the boot loader, hold the * Button during power up. The ERROR indicator comes on, and the POWER indicator blinks. At this time, the firmware boot file may be sent to the printer. Level 0 diagnostics are prevented from starting the firmware and boot load mode is forced to begin.

Extended Diagnostics

Extended diagnostics are entered after Level 0 diagnostics, are part of the firmware, and are activated in one of two ways. The first is by holding NEW CARTRIDGE and/or FEED and applying power (Power On). The second is by holding NEW CARTRIDGE and/or FEED and activating the * Button from OFF or Soft Power On.

OFF	NEW CARTRIDGE	FEED	Test
Power On	Off	Off	Normal Operation
Power On	On	Off	Self Test Diagnostics
Power On	Off	On	Manual Configuration
Power On	On	On	Manual Emulation Set → Configuration
Soft Power On	Off	Off	Normal Operation
Soft Power On	On	Off	Color Alignment
Soft Power On	Off	On	Hex-dump Print
Soft Power On	On	On	Not Defined

Table 4 Extended Diagnostics

Self-Test Diagnostics

Self-test mode allows the printer to be tested to assure that it is working correctly. A number of tests may be run. Self-test is entered by holding the NEW CARTRIDGE button during initial power on.

Hex-dump Mode

To enter hex-dump mode, press and hold the FEED button when resuming operation from OFF mode. Enter OFF by pressing and releasing the * Button. Press and hold the FEED button while pressing and releasing the * Button. Be sure to release the FEED button as soon as the carriage starts to move to prevent paper feeds.

Hex-dump mode is used to diagnose communication problems with the printer. As information is received by the printer, the information is converted to a Hex/ASCII format and printed. No translation is made, which means no commands are interpreted. All information is converted to Hex/ASCII and printed on the receipt tape. If a carriage return is sent to the printer, it is translated to 0D in the hexadecimal field and "." in the ASCII field.

The format follows.

```
54  68  69  73  20  69  73  20        This is
61  20  74  65  73  74  0D  0A        a test..
```

Several indications of printer and host communication problems can be deduced from hex dump mode. If the printer is printing all 3F "?" symbols, the parity or the number of bits is wrong. If the printer is printing some Hex 3F "?" signs when it should be printing other characters, either the parity, baud rate, or bit length setting is wrong. If the printer prints incorrect characters (like Hex C1 instead of Hex 41 "A"), it is set for 8-bit data, and the host is set for 7-bit. In most cases, the print problem can be traced to the host and printer being configured differently.

Understanding Configuration Mode

There are two ways to configure the POSjet® 1500 printer. The first is to use the manual configuration sequence by using the keypad controls, and the second is to use TransAct's remote configuration software. To provide a faster, easier way to configure or reconfigure the printer, a remote configuration program is available and typically used by system integrators. To obtain more information, or the latest version of the configuration program, call our Sales Department or Tech Support.

!TransAct highly recommends that any attempt at configuring the POSjet® 1500 be made by a certified service technician who has successfully completed training on the printer. TransAct is not responsible for printer's that are configured by anyone other than a trained technician!

Remote Configuration Software

Remote configuration is provided for all printers. This configuration program provides a means of configuring printers by using the printer's remote configuration mode. The configuration program is setup to provide initial (factory) printer configuration as well as allow the printer to be reconfigured at any time. During factory configuration, the printer is configured as required by the customer number, and a serial number is embedded in the EEPROM. During the reconfiguration process, features and communication configurations can be altered; however, the serial number cannot be changed. In remote configuration mode, the serial or parallel port on the printer is temporarily reconfigured to a predefined standard. The port is then used for the configuration or reconfiguration operation. The Ithaca Configuration program can configure all configurable features. This program runs on most standard PC computers in Windows 95/98 and NT 4.0.

Manual Configuration

In many cases, manual configuration is locked by the remote configuration. If this is the case, the only way to alter the configuration is by remote configuration.

Manual Configuration is a function of the printer that allows technicians to gain access to the printer's configuration mode. It is accessed by performing a series of steps to the printer. The POSjet® 1500 printer has many configurable features. Most all of the configurable features can be configured by a certified technician using the keypad buttons while in configuration mode. For example, if a dual color printer is to be operated with only one print cartridge, turning off the dual color option will send all data to the single cartridge.

Manual Emulation Set

To allow easy predefined configurations to be loaded, the printer contains an internal default configuration for each of the printer emulation's. The internal default configuration allows a starting point when changing the emulation.

To activate the manual emulation set, press and hold the NEW CARTRIDGE and FEED Buttons during power up. Manual emulation set is the same as manual configuration only with more options. (Note that the additional options are only offered once.)

It is important to note that each emulation can have different configurable features. If you are changing the emulation, the printout that was printed at the beginning of the configuration process will document the initial emulation settings. When you change the emulation, the configurable features may be different. If you are using this print out as a configuration guide, and you are changing the emulation, you may wish to save the new emulation, and then re-enter configuration mode to change other options. This will print all the available features for the new emulation.

Using Self-Test to View Configuration Settings

From configuration mode, a configuration summary receipt will be printed and will show the printer's current features and settings. This receipt is the same as the configuration summary receipt that can be printed through the self-test Mode. It is possible to print the configuration summary receipt using both the self-test, and configuration mode. Therefore, TransAct recommends that self-test be used to print the printer's current configuration receipt. Printing the self-test configuration summary receipt is also recommended before ANY changes to the settings of your printer are made by ANYONE. TransAct recommends that you print this configuration summary receipt as a reference in case you wish to return the printer to its previous configuration state.

Entering Configuration Mode

Manually entering the printer's configuration mode can be accomplished one of two ways. Both ways have been designed to make it difficult to enter configuration mode. This has been done to prevent unintended entry into the mode and unintentional configuration changes. The mode that is used depends on how the printer is setup. If you do not have access to the power connection use the second procedure.

Access Option 1:

1. Unplug the power cord from the printer.

2. Press and hold the FEED Button and plug the power cord back into the printer.

3. Continue to hold the FEED Button until the ERROR INDICATOR LIGHT begins to blink.

4. Release the FEED Button. A receipt will print. This configuration summary receipt shows how your printer is configured. Follow the directions at the bottom of the receipt to change and save configuration settings.

Access Option 2:

1) Use the * Button to place the printer into STANDBY/OFF mode. (The POWER INDICATOR LIGHT should not be illuminated.)

2) Press and hold the NEW CARTRIDGE Button while pressing and releasing the * Button.

3) When the ERROR INDICATOR LIGHT blinks, repress the * Button and release the NEW CARTRIDGE Button. Then release the * Button.

4) You are now in configuration mode.

After you enter configuration mode, the printer will print the current configuration, the current totals, and an internal error log if any errors have been trapped. Save this printout as a guide to changing the configuration. This printout is also helpful in case you wish to return the printer to the previous configuration settings.

Making Changes in Configuration Mode

Press the NEW CARTRIDGE Button quickly to scroll through the list of configurable features. Press and hold the NEW CARTRIDGE Button to change the optional settings for each configurable feature. Press the * Button to exit the printer's configuration mode. The printer gives a configuration summary and asks if the changes you have made are what you want. Press the NEW CARTRIDGE Button to confirm your changes, or, press the * Button if you do not want to save changes.

Using the NEW CARTRIDGE Button in Configuration Mode

The NEW CARTRIDGE Button may be used to select configuration settings, change those settings, navigate through the configuration menu, and save your specific configuration changes. Repeatedly pressing the NEW CARTRIDGE Button will allow you to select the desired configuration category. The categories will appear in sequence as shown on the configuration summary receipt. When you arrive at the desired configuration category, press and hold the NEW CARTRIDGE Button to select the specific setting of that category.

1) Enter configuration mode.
2) Press and release the NEW CARTRIDGE Button. This will display the current "**Baud Rate**"
3) Press and hold the NEW CARTRIDGE Button. When the printer prints, release the NEW CARTRIDGE Button. This will display the next available setting.
4) Repeat step 3 until the proper setting is shown.
5) Press and release the NEW CARTRIDGE Button. This will display the "**Mode**"
6) Repeat step 3 until the proper setting is shown.
7) Press and release the NEW CARTRIDGE Button. Until "**Carriage Return**" is shown.
8) Repeat step 3 until the proper setting is shown.
9) Press and release the NEW CARTRIDGE Button. Until "**Ink Low when at**" is shown.
10) Repeat step 3 until the proper setting is shown.
11) Press the * Button. This will print the current configuration.
12) Review the print out.

If the configuration is not correct press the * Button again and the new configuration will be discarded. You will have to re-enter configuration mode and start over. If the Configuration is correct, press the NEW CARTRIDGE Button and the configuration will be saved.

What do you want to do?	Do this…
Enter into configuration mode	First, disconnect the power cord from the back of the printer. Next, press and hold the FEED Button while plugging the cord back into the printer.
Scroll through the configuration menu	**Press** and quickly **release** the NEW CARTRIDGE Button.
Change specific configuration settings	**Press** and **hold** the NEW CARTRIDGE Button
Exit configuration mode	**Press** and **release** the * Button

Table 5 How to Change Configuration Settings

Configurable Features

The following table lists all the configurable features. Not all are available in all configurations. Not all features are available in all emulation's. Refer to the Notes column for availability of each feature. If not noted, it is available. Several emulation's have sub-emulations. For example, the TM U200 may be configured for 40 or 42 column mode. Take care to configure the exact emulation you want. The TM U200 emulation print out will list the corresponding dip switch settings on the Epson printer. This is intended to help make sure the POSjet® 1500 printer is configured the same way the Epson printer is configured. The bullet marks (•) in the following table signify that the option is a POSjet default setting.

General	Description and options	Default	Notes
Emulation Mode	The POSjet® 1500 printer supports six basic printer emulation modes.		Note: Not all emulations are available in all versions of the POSjet® 1500.
	POSjet® 1500 PcOS		
	Epson TM-U200		
	ESC/POS (Not model specific)		
	Star SP200 and SP2000		
	Citizen 3500 Series		
	Ithaca® M50 IBM		M50 and Microline are not intended for new applications.
	Microline M50, M50PLUS, ML192		
Emulation Options	The POSjet® 1500 printer supports variations on several of the basic configurations		
Posjet PcOS	Print Zone: Normal 2.5 " or Simulated 2.8"	2.5	
	Block DC2 Control (AS400)	Off	
TM-U200	Print Zone		
	Wide 42/35 Character or Narrow 40/33	40	
Esc/Pos	ESC v Command is 2 or 3 characters	2	
Star			
Citizen	PrintZ one		
	23, 28, and 40 Characters	40	
M50	Block DC2 Control (AS400)	Off	
Microline	Print Zone: Normal 2.5 " or Simulated 2.8"	2.5	
	M50. M50PLUS or ML192 Emulation	M50	
	BEL or ESC + CD command	BEL	
	Select Sequence		
	DC1 Select DC3 Deselect	•	
	DC3 Select DC1 Deselect		
	Block DC2 Control (AS400)	Off	
	Print Zone: Normal 2.5 " or Simulated 2.8"	2.5	

Input Buffer	The input receive buffer can be configured to various sizes. The optimal size is dependent on the application. The options are from 40 bytes to 8K bytes.		In TM U200 mode this option also effects the commands available.
	40		TM U200
	256		
	1024		TM U200 Default
	2048		
	4096		
	8192	•	
User Store Locked	Graphic save lock configuration locks the user-store buffers, so they cannot be deleted by the application.		Not available in Star, Citizen, M50, or Microline
	Enabled	•	
	Locked		
Lock On/Off Switch	When the lock feature is functioning, the printer is prevented from being turned off by the On/Off switch.		
	Enabled	•	
	Locked On		
Configuration Locked	The configuration lock feature prevents the configuration from being altered manually. If enabled, the printer can only be configured with the configuration utility. (Note: locked configuration cannot be manually set.)		
	Enabled	•	
	Locked		
Cash Drawers Time	Several features of the cash drawer logic can be adjusted		Make sure the card is configured correctly.
	Cash drawer fire time can be adjusted from 10 to 250 mS	250 m5.	PcOS, M50, and Microline only.
	Invert Status (Normal or inverted sense)	N	
Cash Drawer Sense	Normal		
	Inverted		
Print Ink Status	When the NEW CARTRIDGE is pressed the ink status is normally printed.		
	Ink status is printed	•	
	Ink status is not printed		
Audio Alert	The initial signal time for the audio alert can be adjusted		If 0 the alert is off or not present.
	Time is adjustable from 100 mS to 1 Sec		
Color Options	The color and presence of the second pen can be configured.		Not available in M50 or Microline.

Left Cartridge Color	Cartridge Options		
	Black	•	Single Color Printers
	Red		Multi Color Printers
	Blue (not yet available)		
	Green (not yet available)		
Right Cartridge Color	Cartridge Options		
	Not Installed	•	Single Color Printers
	Color Ready		Multi Color Printers
	Red	•	
	Blue (not yet available)		
	Green (not yet available)		
Ink Low When At:	Signal ink low when x% of the ink has been used.		This sets the point when the printer reports ink low. The printer does not stop printing at ink low
	Ink Low is OFF (never signal ink low)		
	Ink Low when at 75%		
	Ink Low when at 80%		
	Ink Low when at 85%		
	Ink Low when at 90%		
	Ink Low when at 95%	•	
	Ink Low when at 100%		
Print Zone	Normal 2.5”		This is accomplished by shrinking the character spacing.
	Simulated 2.8”		
Vertical Control			
Line Spacing	The line spacing can be defaulted to 6 or 8 lines per inch (lpi).		This is not available in STAR and TM U200 mode
	6 lpi		This is the default for most Epson printers
	8 lpi	•	
Auto Line Feed/ Carriage Return	An auto line feed feature can be set as a default where all [CR]’s have a [LF] added. In addition, a CR is added to a LF, and the CR or LF can be configured to be ignored.		Setting Depends on emulation.
	Normal CR/LF actions. Both are processed.		
	Ignore all LF characters		
	Ignore all CR characters		Default for most Epson printers.
	Add a LF to all CR characters		
	Add a CR to all LF characters	•	
	Add a CR to all LF characters, and add a LF to all CR characters		
Page Length	The default page length can be set to various lengths from 2 to 60 lines. Page length configuration affects how the [FF] command operates.		Page length can be set in PcOS, M50, And Microline only.
	2 to 60 lines	40	

Fonts				
Font	The default print mode can be set to 12 x 12 draft, 12 x 14 large draft, or 24 x 32 NLQ modes.			This is not configurable is all emulations.
	12 x 12 draft		•	
	12 x 14 large draft			
	24 x 32 NLQ			
Pitch (CPI)	The default print pitch can be set to 8, 10, 12, 15, 17.1, 20, or 24 characters per inch.			
	8 cpi			
	10 cpi			
	12 cpi			
	15 cpi			
	17.1 cpi		PcOS	
	20 cpi			
	24 cpi			
Code Sets **Code Pages**	The POSjet® 1500 Printer supports the following code sets. The setting defines only the default printer mode. IBM specifies code pages differently than Epson. Any set can be selected as a default regardless of emulation. However, the selections through software are restricted by the emulation.			
	IBM	Epson	Description	
	64	-	ASCII (Slashed 0)	
	65	-	ASCII (Unslashed 0)	
	66	3	British	
	67	2	German	
	68	-	French	
	69	5	Swedish I	
	70	-	Danish	
	71	-	Norwegian	
	72	14	Dutch	
	73	-	Italian	
	74	13	French Canadian	
	75	-	Spanish	
	76	15	Swedish II	
	77	16	Swedish III	
	78	17	Swedish IV	
	79	18	Turkish	
	80	19	Swiss I	
	81	20	Swiss II	
	91	-	Welsh	
	93	93	Arabic[2]	
	437	0	USA	•
	774	74	Baltic_774	
	850	26	Multilingual	
	852	46	East Europe Latin II - 852	

[2] Arabic available on special order only.

Code Sets	855	44	Cyrillic I - 855		
Code Pages	857	57	Turkey_857		
	858	-	Multilingual (Euro)		
	860	28	Portugal		
	861	73	Icelandic-861		
	862	60	Hebrew NC (862)		
	863	43	Canada French		
	865	27	Norway		
	866	21+45	Cyrillic II - 866		
	869	47	Greek_869		
	895	55	Kamenicky (MJK)		
	1008	38	Greek_437		
	1009	39	Greek_928		
	1011	41	Greek_437 CYPRUS		
	1012	29	Turkey		
	1013	21+45	Cyrillic II - 866		
	1014	22	Polska Mazovia		
	1015	23	ISO Latin 2		
	1016	24	Serbo Croatic I		
	1017	25	Serbo Croatic II		
	1018	42	ECMA-94		
	1019	49	Windows East Europe		
	1020	50	Windows Greek		
	1021	51	Latin 5 (Windows Turkey)		
	1022	52	Windows Cyrillic		
	1024	54	Hungarian CWI		
	1026	56	ISO Latin 4(8859/4)		
	1027	66	Ukrainian		
	1028	58	Roman-8		
	1029	67	ISO Latin 6 (8859/10)		
	1030	60	Hebrew NC (862)		
	1031	61	Hebrew OC		
	1032	62	Windows Hebrew		
	1033	63	KBL-Lithuanian		
	1034	68	Windows Baltic		
	1035	69	Cyrillic-Latvian		
	1072	72	Bulgarian		
	-	1	French		
	-	4	Danish I		
	-	6	Italian		
	-	7	Spanish I		
	-	8	Japanese		
	-	9	Norwegian		
	-	10	Danish II		
	-	11	Spanish II		
	-	12	Latin American		
	-	254	Space		
	-	255	Space		

Zero Character	The zero character can be configured to be unslashed or slashed in all character sets except IBM 64 and 65, which override the setting.		
	Unslashed		
	Slashed	•	
Comm. Interface	The POSjet® 1500 auto configures the communication interface based on the card installed. A few options apply to both serial and parallel communication interfaces.		
Off-line Mode	Off-line mode defines when the printer informs the host that it is off line.		This effects the ASB for TM U200 and ESC/POS modes.
	Normal The printer goes off-line when the buffer is full or the printer cannot print.	•	ASB Defaults off.
	Buffer Full The printer goes off-line only when the buffer is full. This mode requires that the host request printer status from the printer.		This should be selected for Windows operation. ASB Defaults all on.
Parallel Link Options	The parallel option features define how the busy and acknowledge signals operate.		
	Ack-while-Busy		
	Ack-in-Busy	•	
	Ack-after-Busy		
Parallel Port INIT Pin	The parallel port INIT pin can be deactivated.		
	Active	•	
	Inactive		
10 CPI (DC2)	Normal		
	Disabled		
Serial Interface Options			
Parity	The serial mode parity can be set to none, odd, or even.		
	None	•	
	Odd		
	Even		
Bit Data	The serial bit format can be set to 8 or 7.		
	8	•	
	7		
Error Character	If a communications error occurs, an internal error is generated. The printer can be configured to ignore the data or print a "?"		
	Enabled prints "?"	•	
	Disabled ignores the data		
Protocol	The flow control protocol of the serial link can be set to Ready/Busy or XON/XOFF. Ready/Busy functions when XON/XOFF is selected.		
	Ready/Busy	•	
	XON/XOFF		

Baud Rate	The bit rate of the printer can be set. The same bit rate is used for send and receive.		
	38400 BPS		
	19200 BPS	•	
	9600 BPS		
	4800 BPS		
	2400 BPS		
	1200 BPS		
	600 BPS		
	300 BPS		
DTR/RTS Signal	The serial port DTR and/or RTS signal can be configured to provide flow control. If DTR is configured as the flow control signal, it toggles to false when the buffer is full. RTS does not. When the cover is opened, both signals always toggle to false.		
	Not Used (Not valid unless in XON/XOFF Mode)		
	DTR Flow		
	RTS Flow		
	RTS and DTR Flow	•	
CTS Signal	If active, a false CTS prevents the printer from sending any data to the host		
	Not Used	•	
	Active		
Multidrop	The multi-drop feature is activated at power up when set to an address.		This option is available in Star, PcOS, M50 and Microline only.
	Off	•	
	A Device		
	B Device		
	C Device		
Options			
Cutter Option	Specifies that the cutter option is attached.		
	Not present or disabled		
	Active		
Knife Pre-Cut Feed	The printer can be configured to feed from 0 to 26 mm of paper before the paper is cut.	0	Available in EPOS emulation only.

Table 6 Configurable Options

Printer Color Configuration

Using Ink Cartridges

- It is not possible to configure the printer to operate with two black cartridges.
- Do not store a spare cartridge in the second carriage socket position.
- Always store extra ink cartridges in the unopened original HP packaging until needed.
- Do not replace an empty ink cartridge with anything but a new ink cartridge that is approved and compatible with the printer.

Ink Cartridge Setup

The POSjet® 1500 is available with three different printing options and can be reconfigured to accept different ink cartridge colors. See "Understanding Configuration Mode" on page 38 for information on how to change configuration settings. The standard printer setup is called Single Color. In addition to this, the printer can be operated with a Two Color Ready, or a Two Color setup. All three of these printing setup options require different printer configuration settings. The following information highlights the different functionality of each printing option and includes the corresponding configuration settings that are needed to make each printing option perform correctly.

Single Color Setup

The Single Color printer setup is a factory built option. It is configured to handle a single ink cartridge and cannot be field upgraded for two-color operation.

When using the POSjet with a single cartridge setup the left ink carriage should contain a single BLACK cartridge,

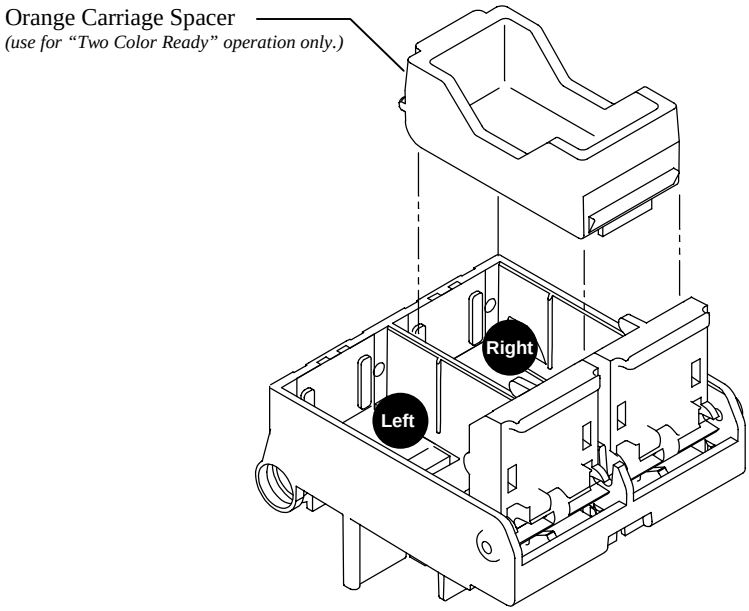

or a single color ink cartridge.

Printing Setup	Left Cart.	Right Cart.	Wiper	*Selecting the configuration menu settings:*
Single Cartridge Operation	Black or any color	None	Fixed	Factory built option. Not field upgradeable. **No configuration required for operation.**

Table 7 Single Color Printer-Color Configuration Details

Two-Color Ready Setup (single cartridge setup)

The two-color ready setup allows the POSjet® to operate as a Single Color printer with the option of reconfiguring the printer for two-color printing. This reconfiguration can be done at anytime by TransAct or any one of our certified service technicians.

A printer that is setup with the two-color ready option but has no second cartridge in the right carriage always needs to have the orange colored, plastic spacer in the right carriage. There is an auto-sense feature that attempts to auto sense the presence of a second cartridge. This auto-sense will momentarily re-configure the printer for two cartridge operation. The auto-sense is performed when power is applied to the printer (not with the * Button). If the printer is power cycled without the second cartridge, the printer will revert back to single cartridge operation. When the printer has the second cartridge installed, it should be reconfigured through software, or with manual configuration to be a two cartridge (color) printer. In addition to this, the printer needs the following configuration settings:

Printing Setup	Left Cart.	Right Cart.	Wiper	***Selecting the configuration menu settings:*** *See "Understanding Configuration* **Mode***" on page 38 for information on how to change configuration settings.*	
Two Color Ready Operation	Black or any color	Orange spacer required	Dual	**Config. Menu Option:** *Left Cartridge Color* ***Black***	**Config. Menu Option:** Right Cartridge Color ***Color Ready***

Table 8 Two Color Ready Operation-Color Configuration Details

Two Color Setup (two cartridge setup)

Two-color operation setup allows the POSjet® to operate as a two-color printer. Unlike the two-color ready setup, the two-color setup does not use the orange colored spacer in the right carriage. Instead, the right carriage holds a color ink cartridge, and is used along with the desired ink cartridge in the left carriage to produce two-color printing. Color ink cartridges do not work in the left carriage socket. Use only black ink cartridges in the left carriage socket. The color of the second cartridge should be configured into the POSjet® 1500 printer. The printer should be set to Red, Green, or Blue. If the cartridge that is installed is not one of these primary colors, the nearest primary color should be selected. For example if the cartridge is Orange, the nearest primary color is Red. A printer that is setup to print multiple colors needs to have the following configuration settings:

Printing Setup	Left Cart.	Right Cart.	Wiper	***Selecting the configuration menu settings:*** *See "Understanding Configuration* **Mode***" on page 38 for information on how to change configuration settings.*	
Two Cartridge Operation	Black or any color	Red Green Blue	Dual	**Left Cartridge Menu** Black Red Green Blue	**Right Cartridge Menu** Red Green Blue

Table 9 Two Color Operation-Color Configuration Details

Deactivating the Two-Color Setup (back to Single Color setup)

A printer that is setup for two-color printing can be reconfigured to print using only a single cartridge. This can be achieved by resetting the left cartridge color to "BLACK" and the right cartridge color to "COLOR READY" using the configuration menu. When "COLOR READY" is activated, all printing data will be sent to the left cartridge and the printer will be able to print using a single cartridge in the left carriage only. When "COLOR READY" is activated, the orange spacer needs to be re-inserted into the right carriage.

Section 3: Data Processing and Communications

Printer Flow Control and Print Buffers

The following figure illustrates the communication flow from host computer to printer and from printer to cash drawer.

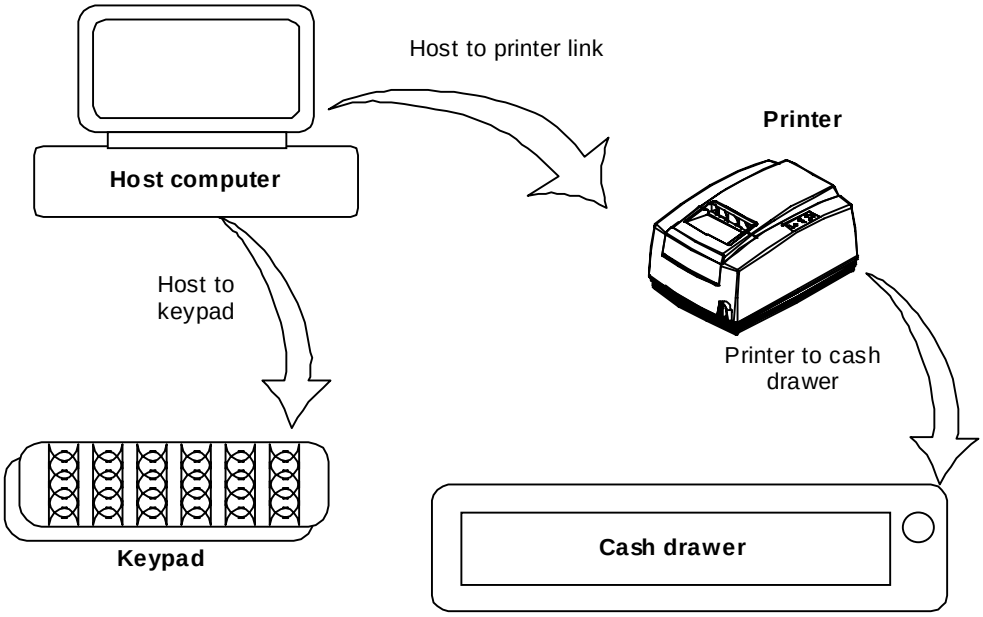

Figure 15 Typical POS System

For the host to printer communication link, the POSjet® 1500 Printer supports serial or parallel communications. The serial and parallel ports both follow standards developed for the personal computer environment.

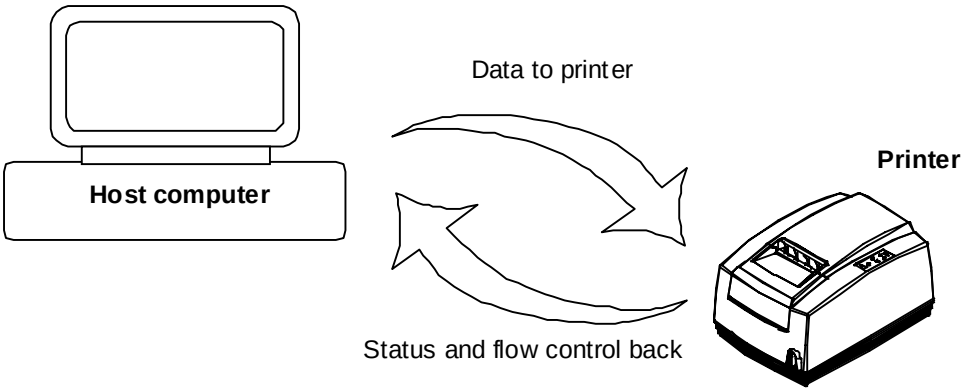

Figure 16 Host to Printer Link

In most cases, the host computer is capable of sending information to the printer much faster than the printer can print it. To prevent information from being lost, a flow control mechanism is provided. The mechanism is called the flow control protocol. The goal of the flow control protocol is to exchange as much information as possible as fast as possible without losing any data. The POSjet® 1500 Printer supports three flow control protocols, two in serial mode and one in parallel.

From the printer's point of view, four basic functions are required of communications. All four are common to all three flow control protocols. There must be a communication driver, status inquire procedure, storage buffer, and print control mechanism that is using the data.

The communication port is either the serial port hardware or the parallel port hardware and the associated communication software driver.

A means for the host to bypass the buffer for status information, referred to here as an inquirer processor, is also required because the buffer offsets the printer in time from the host. (The printer is generally behind the host).

The storage print buffer is a software implemented, first-in first-out (FIFO) circular buffer. It stores information in an asynchronous fashion where information can be placed in it at any rate and retrieved from it at any rate, but the information order is not altered. All buffers have a finite size, and if information is put in faster than it is removed, the buffer will overflow. To avoid overflow, a flow control mechanism is required.

The print control mechanism is the remainder of the printer hardware and control software. It interprets control codes and operates the control panel, print head, and cash drawer interface.

The following figure illustrates the four basic parts of printer flow control.

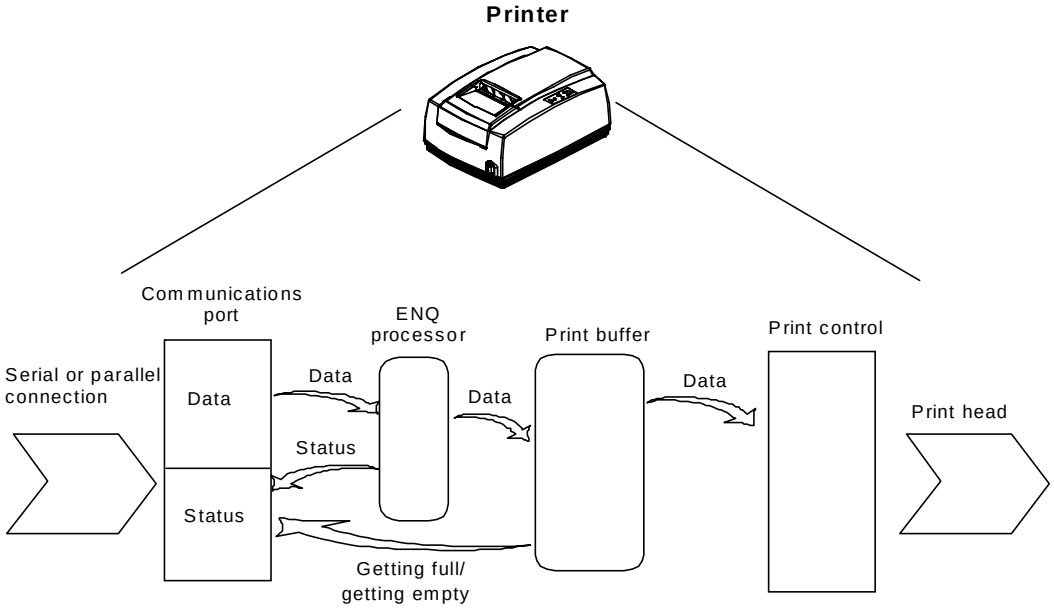

Figure 17 Printer Communications Buffer Flow

The communication port is either serial or parallel and is controlled by a software communication driver. The driver receives data and returns requested status. As information is received from the host, data is taken from the communication port hardware by the driver, preprocessed to look for status inquire commands, and placed in the buffer. When the buffer input function finds that the buffer is getting full, it notifies the communication driver to implement flow control. Flow control attempts to stop further information from being sent from the host.

The print control software takes information from the buffer, as it needs it and can use it. When the buffer output function finds that the buffer is getting low, it notifies the communication driver that the information flow can be resumed (if it was stopped) and allows more information to be placed in the buffer.

The POSjet® 1500 Printer has a configurable input buffer. The printer can be configured to allow from 40 to 8196 bytes of input buffer. Consequently, up to 8196 characters (or control codes) can be sent to the printer before they are interpreted and printed. In effect, the host computer can get 8196 characters ahead of the printer. In all cases, the buffer resumes communications when it is half-empty. For example, if the buffer is configured to be 2048, the printer will signal stop when 2048 bytes are in the buffer; resume will be signaled when 1024 bytes remain. Inquire commands are preprocessed, which means they are found in the input data stream and acted upon as they are received. The status returned is valid as of the time the command is received. This is termed real-time status even though inquire commands are preprocessed and still placed in the buffer. Real-time status assures that data is not lost when the inquire sequence is part of another command. However, the buffer may also be filled by inquire commands if the printer is waiting for some activity.

Section 4: Port Protocols and Connection Specifics

Universal Serial Bus (USB)

USB stands for Universal Serial Bus. It was originally conceived in the early 90's and officially recognized by Compaq, Intel, Microsoft and NEC. The development of USB has been slow, however, with the release of Windows 95 SR2 development accelerated. Windows 2000 now fully supports USB as do Windows 98 SE, and Windows Me. A technical discussion of USB is beyond the scope of this document. If you would like more information about USB, visit the USB web site at www.usb.org.

USB Support and Standards

POS printers are different from typical Windows printers in several ways. Microsoft has recognized these differences and has been working with the USB Device Working Group to generate a set of standards that would abstract all point-of-sale devices at the application level. At this time, a workable standard for POS is years away. So while Microsoft is interested in POS in the long term, Microsoft's immediate goal is to enable POS USB devices a way that is compatible with existing service objects.

In order to support USB POS devices under the existing software architecture, Microsoft is providing the POSUSB driver model to allow USB POS devices to interface as serial COM ports to service object DLLs.

The Transact USB Printer interface is based on this Microsoft POSUSB driver model. It provides full bi-directional interface to the printer and allows most existing applications to interface to the USB, Ithaca®, POSjet® 1500 as if it were on a serial COM port. In addition to this, we have allowed the printer to register as a composite device. This allows the printer to appear in the system as a USB print device as well as a COM port. If you are using a windows printer driver (ours or the Generic driver) you can assign the printer to the USB port.

We hope that supporting the USB Ithaca POSjet® 1500 as a composite device provides the best of both worlds to our customer.

The USB interface card that is used with the POSjet® 1500 is designed with the Cypress Anchor Chips EZ-USB chip. The Anchor Chips EZ-USB is a compact integrated circuit that provides a highly integrated solution for implementing a USB peripheral device.

Two key EZ-USB features that are important to the end user are:

1. The EZ-USB family provides a "soft" (RAM-based) solution that allows unlimited configuration and upgrades.
2. The EZ-USB family delivers full USB throughput. Designs that use EZ-USB are not limited by number of endpoints, buffer sizes or transfer speeds.

Because the USB interface card is RAM based it must have firmware loaded into it every time it is turned on. The POSjet® 1500 interface card can be configured with firmware in an EEPROM on the interface card or down loaded from the windows USB driver. Transact will support firmware on the interface card upon request but supports the driver down load by default. (The driver down load takes less than a second!). We are doing this to allow easy USB updates and to assure compatibility between the host driver and the firmware on the USB Interface card.

The USB Driver is available from customer support and by download from our web site.

Transact has written a POSPrinter.OCX ActiveX that will allow you to easily interface to our printers. It is used by all of our demonstration programs. This OCX is available for use with customer applications. It works with printers installed on Serial COM ports, LPT ports and USB. A USB compatible Beta version is available from customer support or from our web site.

Parallel Port

Parallel Port Protocol

The POSjet® 1500 parallel port behaves just as any printer connected to a personal computer. The parallel interface accepts 8-bits of data from the host. The strobe signal from the host is used to indicate that data is available. When the printer sees the strobe signal and accepts the data, it asserts a busy signal. The busy signal indicates to the host that the printer has accepted the data and is working on it. After the printer absorbs the data and is ready to accept another byte, the printer asserts acknowledged (ACK), negates busy, and then finally negates ACK.

The host computer should meet the following parallel-port specifications and timing. In a standard personal computer, the strobe signal is generated by software writes to the parallel-port control port, which is typically done in the bios or some parallel-port driver. As personal computers become faster, it is up to the software to assure that the strobe signal does not get too narrow. One microsecond is the minimum pulse width that should be sent down a cable. Shorter pulse widths (500 nanoseconds) will be accepted by the printer. The cable can introduce significant signal degeneration and skew.

Parallel Port Timing

The data must be valid before the strobe signal is asserted, and remain valid, until the strobe is removed. A 500 nanosecond setup and hold time is required by the printer. The following chart illustrates parallel-port timing.

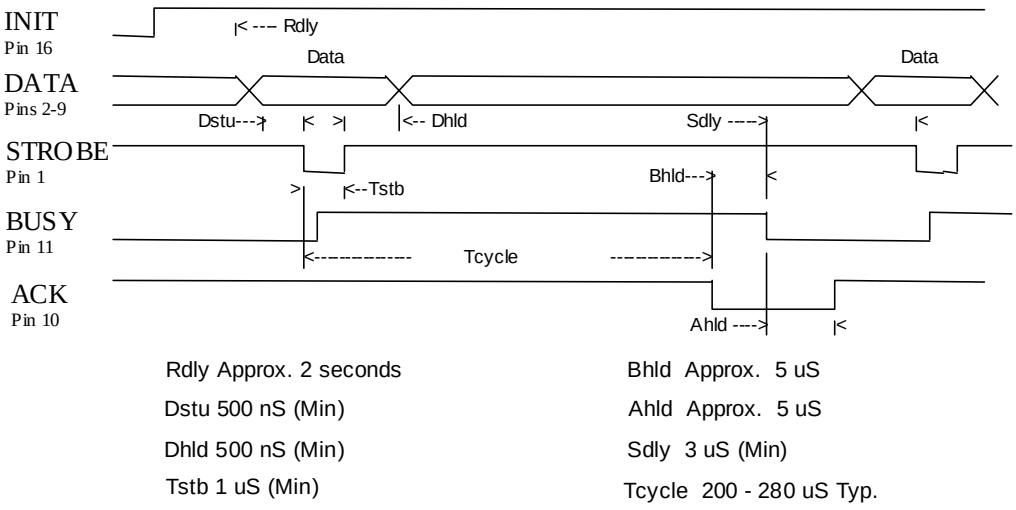

Figure 18 Parallel-port Data Timing

To implement flow control, the busy signal is asserted by the printer outside the normal data-transfer sequence. The busy signal has several uses, but it always indicates that the printer cannot accept information. The busy signal may happen at any time and may not adhere to the above timing chart in all cases. It is up to the host's parallel-port driver to handle all possible busy states. It is important that the host driver does not hang up if it takes some time for an acknowledged (ACK) response to a strobe signal. Standard personal computer parallel-port hardware implements an interrupt on the ACK signal to make flow control easier.

Some systems may wish to change the details of how the strobe, busy, and acknowledged signals interact. The parallel-port option features define how the strobe, busy, and acknowledged signals operate. In normal mode, the printer follows the standard (Centronics) parallel-port conventions. With Options 1 and 3, the acknowledged and busy signals change simultaneously, which is sometimes referred to as ack-after-busy. Options 2 and 3 force busy high, on the rising edge of the strobe, which is sometimes referred to as busy-while-strobe timing. In all cases, the data is latched on the rising edge of the strobe. In most cases, the normal timing mode gives the best results.

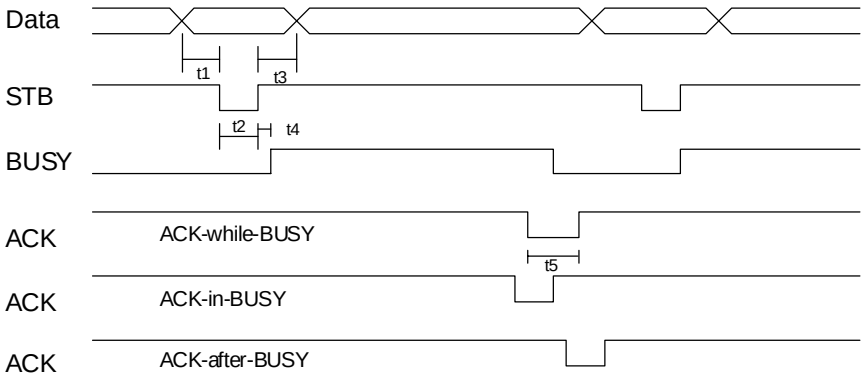

Figure 19 Parallel Port ACK Timing Options

Legend	Time Interval	Minimum	Maximum
t1	DATA Setup to STB	0.5 uS	
t2	STB Width	0.5 uS	500 uS
t3	DATA Hold after STB	0.5 uS	
t4	BUSY Delay after STB	0	0.5 uS
t5	ACK Pulse Width	2.5 uS	

Table 10 Parallel-port Timing

Note: Altered STB timing to take data on the falling edge of STB can be generated as a factory option.

Printer Buffer Size

The POSjet® 1500 Printer has a configurable buffer size. It can be set from 40 to 8192 bytes. The configurable buffer allows an application to control how far ahead the buffer gets from the printer. The smaller the buffer, the tighter the control will be. It is up to the application developer to select the optimal buffer size.

Parallel Port Inquire and IEEE 1284

The POSjet® 1500 Printer supports the IEEE 1284 bi-directional, parallel, peripheral interface standard. The IEEE 1284 standard provides for a bidirectional link on the parallel port. The POSjet® 1500 Printer only supports Modes 0 and 4, which provide a nibble mode reverse channel for printer identification and status inquire commands. It is beyond the scope of this guide to describe the IEEE 1284 protocol. The complete specification is available from the Institute of Electrical and Electronic Engineers, Inc, 345 East 47th Street, New York, NY 10017, USA.

IEEE 1284 Response Buffer

The POSjet® 1500 Printer has a 256-byte buffer that contains information to be returned by the IEEE 1284 reverse link. Information is placed in the buffer in the same format as RS-232 serial information is returned.

Inquire commands sent to the printer in IEEE 1284 mode place responses to the commands in the IEEE 1284 reverse-channel buffer. The buffer is then transmitted to the host when it requests the reverse channel.

Mode 4

Mode 4 allows the printer to return identification information to the host system. The POSjet® 1500 Printer returns:

xx,yy length of following data, 2 bytes with MSB first

MANUFACTURER	TransAct Technologies
COMMAND SET	IPCL
MODEL	1000
COMMENT	Rev. x.xx
ACTIVE COMMAND SET	IPCL

When a Mode 4 request is made, the IEEE 1284 buffer is cleared before the ID is sent.

Mode 0

Mode 0 provides a reverse channel for information from the printer. Normal responses to inquire commands are placed in the IEEE 1284 reverse-channel buffer. The Mode 0 reverse-channel request begins returning information to the host. The host may terminate the transmission at any time. If the link is terminated between nibbles, the last nibble is retransmitted on the next request. If a complete byte is transmitted, it is deleted from the IEEE 1284 reverse-channel buffer.

An inquire command can clear the reverse-channel buffer before placing its response in the buffer.

The IEEE 1284 buffer is limited to 1000 characters. If the buffer is not emptied by reverse-channel requests, the buffer overflows. The buffer is a first-in first-out (FIFO) buffer, and the last data placed in the buffer is lost.

Time-outs

IEEE 1284 specifies time-outs for various phases of the protocol. The POSjet® 1500 Printer treats time-outs as minimums. The printer time outs at the specified period only if it is idle during the complete phase.

Active State

The IEEE 1284 reverse channel may be activated at any time as long as the printer is not busy with data. If the printer is off-line or the cover is open, the reverse channel may be activated. If the printer is placed back on-line while the reverse channel is active, the printer will not exit the reverse-channel mode.

Inquire Responses

In general, inquire commands place two-byte responses in the IEEE 1284 reverse-channel buffer. The two bytes are the same as the serial mode responses. In IEEE 1284 mode, the printer remains busy until the inquire command is processed, assuring responses in real time. To receive the response, the host must ask for it. It is possible for the host to make a number of requests and wait for the responses; however, the status returned is valid at the time the request was made.

It is also possible for the dynamic response mode to be activated and the reverse-channel mode to be opened. The reverse channel then changes from reverse-idle to reverse-data available as the status changes. The application must be careful in dynamic response mode that the dynamic responses are not left active when the reverse channel is closed. If the dynamic responses are active when the reverse channel closes, the output buffer overflows. If data is in the buffer when dynamic responses are activated, it will not be replaced by the current status. If dynamic response is off and a buffer-clear command is issued followed by activation of dynamic responses, the buffer will contain fresh data. If the buffer-clear command is issued after the dynamic response is activated, the buffer will be cleared and any unread responses will be lost.

Parallel Port Plug and Play

Microsoft Windows implements Plug and Play (PnP) by doing a special parallel, IEEE 1284 inquire during boot. The POSjet® 1500 Printer responds to the inquiry if IEEE 1284 is active.

If the Windows PnP configuration flag is set in the printer, IEEE 1284 will be active for all parallel-port modes. For example, PnP in parallel mode forces IEEE 1284. For PnP to work, the host must have an IEEE 1284-compatible port adapter, and the cable used to connect to the printer must support all of the interface signals.

The Plug and Play response follows.

Device ID string:

Manufacturer:	TransAct.; CMD:PJ1000CL,IPCL; CLS:PRINTER;MDL S1000 PcOS; DES:TransAct POSjet® 1500; REV:02.00;OPTS;$9xyz
PnP ID:	LPTENUM\TransAct.S1000_PcECB3
Device:	Ithaca® POSjet® 1500
Device	Class: Printer
The OPTS field is always:	OPTS;$2XYZ

Where X is a model definition, X and Y are bit fields that designate the options attached to the printer.

Bit Field Y		Bit Field X	
Bit 0	Print zone	Bit 0	0
Bit 1	Undefined	Bit 1	Knife module attached
Bit 2	Undefined	Bit 2	0
Bit 3	0	Bit 3	0
Bits 4-5	1	Bits 4-5	1
Bits 6-7	0	Bits 6-7	0

Serial Port

Serial Port Protocol

The serial port supports two flow control standards, XON/XOFF and Ready/Busy (sometimes called Data Terminal Ready (DTR) or hardware handshake).

When Ready/Busy flow control is selected, the printer can be configured to use DTR, Request to Send (RTS), or both for flow control. If only DTR is selected for flow control, RTS will indicate the cover is open or the printer has faulted. The following discussion assumes the DTR is being used for flow control.

The Ready/Busy protocol generally uses the DTR signal to indicate to the host computer that the printer is not ready to accept data. The host should stop sending data to the printer as soon as possible. Because the host may not notice the DTR signal until it has transmitted several bytes of data to the printer, the printer continues to except up to 255[3] bytes of data after it indicates that it is not ready. Figure 20 Serial Port Flow Control Using DTR illustrates how the Ready/Busy protocol works, and Figure 21 XON/XOFF Serial Port Flow Control illustrates how the XON/XOFF protocol works.

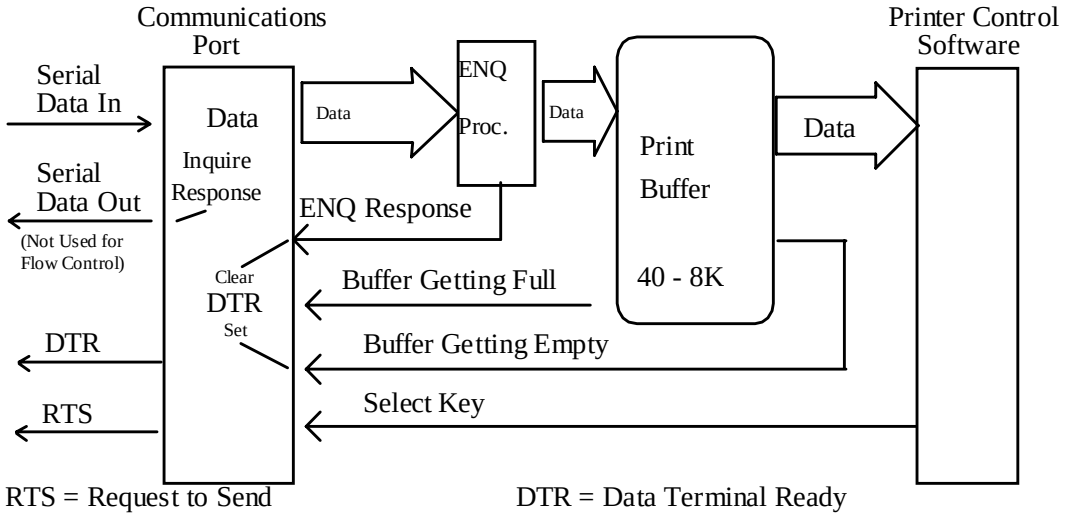

Figure 20 Serial Port Flow Control Using DTR

[3] The buffer always signals it is full before it overflows. The size of the reserve depends on the buffer size selected. It is always at least 255 bytes.

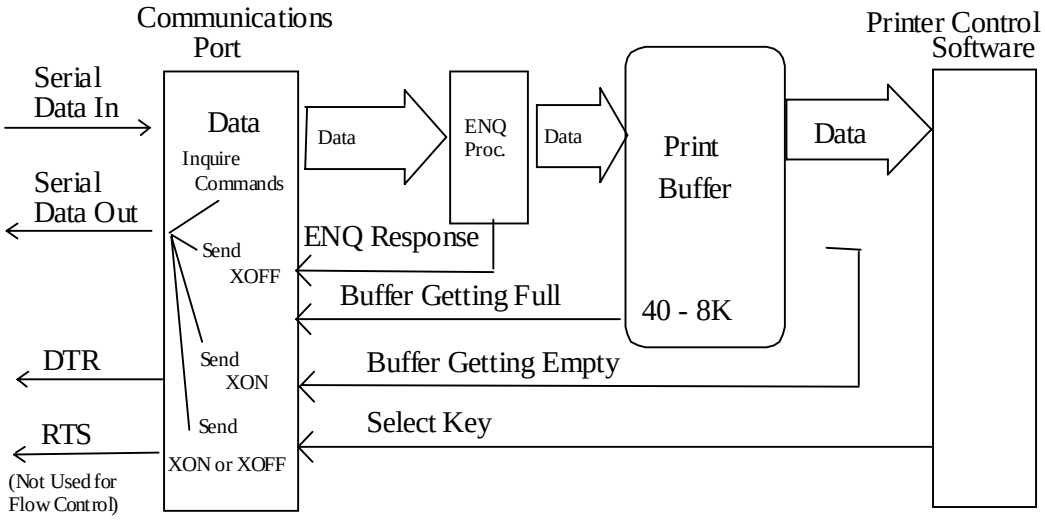

RTS = Request to Send DTR = Data Terminal Ready

Figure 21 XON/XOFF Serial Port Flow Control

Print Buffer Flow

The following chart illustrates how the communications driver acquires data from the serial port and places it in the buffer using Ready/Busy or XON/XOFF flow control.

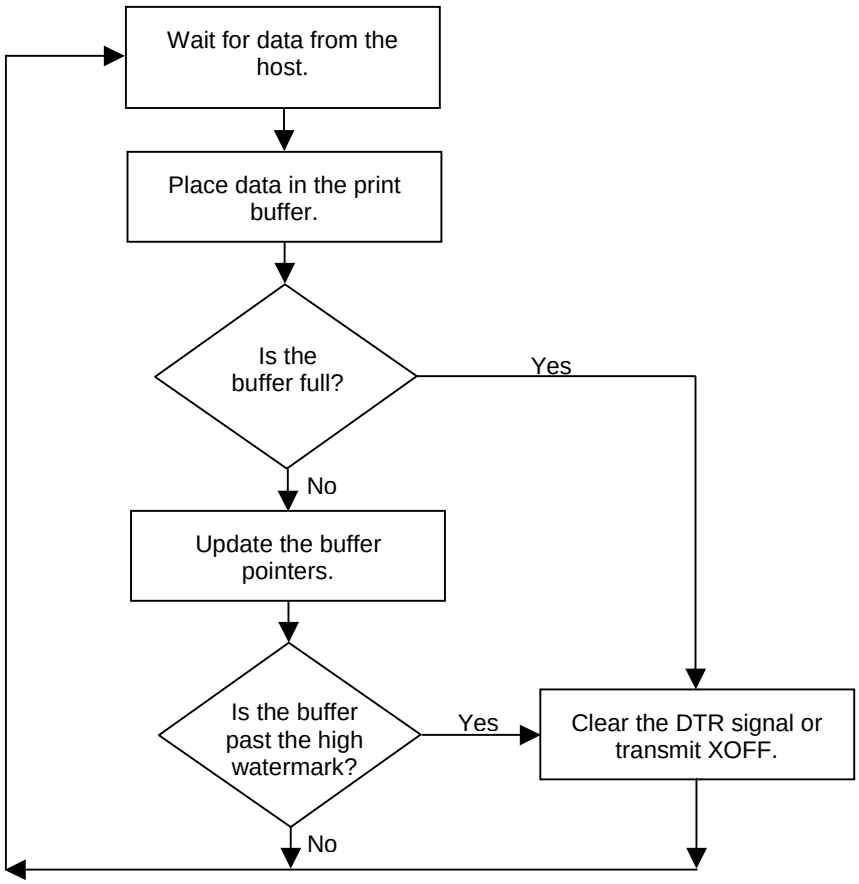

Flow Chart 1 Serial Buffer Operation

The top of the chart shows that the driver is waiting for data. When data is received from the host, the printer checks to see if it is an inquire command. If the data is an inquire, it is responded to and placed in the buffer. If not, the data is placed in the buffer without response. The buffer is then checked to see if it is full before the internal pointer is incremented. If it is not full, the pointer is incremented in preparation for the next data byte. The buffer is checked by looking to see if it has passed a high watermark. If the buffer has, the communication driver is notified, and it resets DTR to indicate to the host that no more data should be sent. This chart also illustrates how the print control software takes data from the buffer and controls flow. At the top of the chart, the print control software asks for data. If there is no data in the buffer, a “no data flag” is returned. The print software must then wait for data. If there is data in the buffer, it is read, and the pointers are updated. The buffer is then checked to see how much information is left. If the buffer is below a low watermark (about 100 bytes left), the communication driver is notified, and DTR is reasserted.

When XON/XOFF flow control is used, the flow is similar to DTR flow except that DTR is not used and XON/XOFF control characters are transmitted back to the host on the serial link. The XON/XOFF advantage is that only three wires are required to interconnect to a printer. The disadvantage is that a serial-port receiver driver must be written for the host.

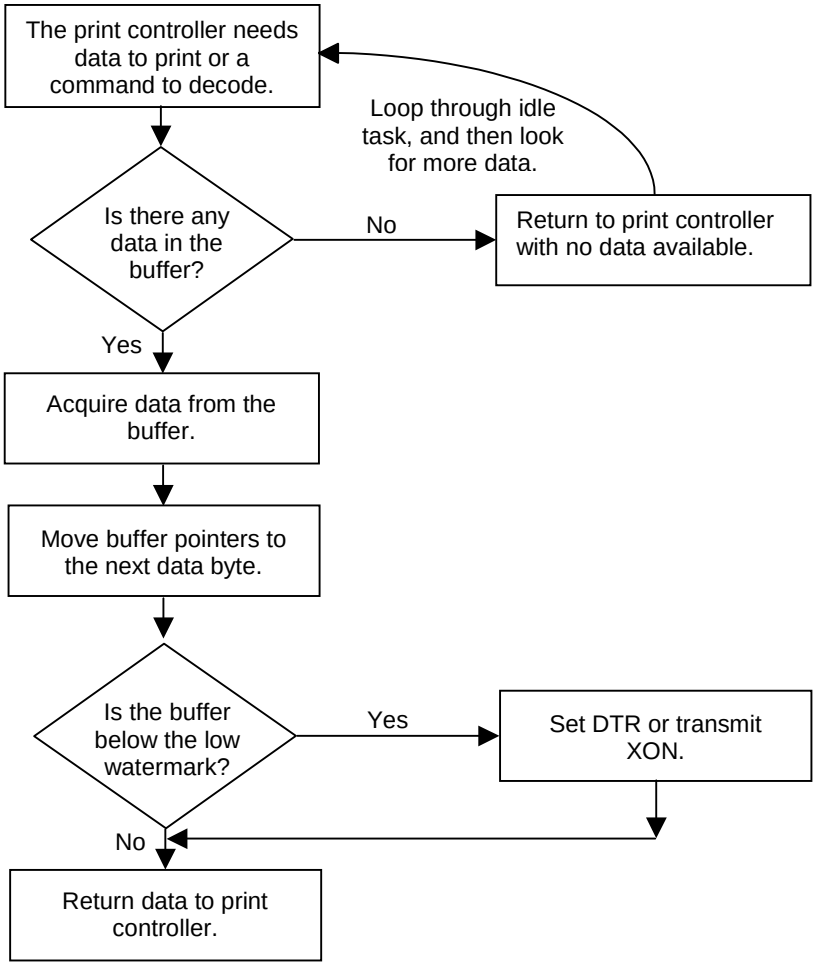

Flow Chart 2 Print Controller Using Data

When the printer is on, the print controller looks for data. If there is data, it processes it. Flow control is done when the data is taken from the buffer and the amount of data in the buffer is less than a prescribed amount. The low watermark is set based on the expected environment. The POSjet® 1500 printer sets the low watermark at half the buffer size or 1024 characters whichever is smaller. The low watermark gives the host application time to get more data to the printer before the printer uses up what it has.

When XON/XOFF protocol is implemented, it is possible for the host to miss an XON or an XOFF. To prevent this from causing a communication lockup, the printer sends an XOFF for every character received after the high watermark is reached. If the printer detects that the serial data link is inactive, it sends out an XON about every two seconds. When the printer cover is opened, an XOFF is sent. An XOFF is sent even when the internal data buffer is past the high watermark. This is done to allow the host to know that the printer is not ready.

Printer Buffer Size

The size of the POSjet® 1500 buffer is configurable, which allows an application to control how far ahead of the printer it can get before being asked to wait. The buffer size can be set from 256 to 6144 bytes (not including the 64-character high-speed buffer). The smaller the buffer, the tighter the control will be. It is up to the developer to select the optimal buffer size for an application.

Serial Mode Plug and Play

Microsoft has defined a Plug and Play (PnP) protocol to identify devices on serial links. The enumeration process is designed to find and automatically configure a device driver for the printer. It is done by toggling the control lines in a specific sequence that is recognized by the printer. The peripheral then responds such that Windows can identify the device.

To allow the printer to look for and respond to the sequence, EISA PnP must be enabled. When enabled in serial mode, the flow control is forced to Request to Send (RTS) with Data Terminal Ready (DTR) static.

Using DSR

Windows uses the host's Data Set Ready (DSR) line (the printer's DTR line) on the serial port to determine whether a device is attached to the port. When Windows is booted (or does PnP), the system sets the host's DTR and RTS to zero and waits approximately 200 milliseconds. It then sets the DTR to one, and waits another 200 milliseconds. After 200 milliseconds, the system checks to see whether the DSR line is high. This indicates that a serial device is attached to the serial port. The system responds by setting RTS high and waits to receive the device identification string.

In some devices, such as the serial mouse, the DSR line can be held high by tying it directly to the DTR line. When the mouse is connected to the serial port on the personal computer, the power supplied through the DTR line also raises DSR high.

For Plug and Play compatibility, RTS flow control is used at the printer because DSR must stay high as long as the device is attached to the serial port.

Serial Device Identification

The serial device must report its identification to the system using an identification string at 1200 baud. The identification string consists of 18 fields that identify the device, class of the device, and other compatible devices. Only five of the fields are required by all serial devices; all others are optional. The identification string used by the POSjet® 1500 printer follows.

028H	**Start of ASCII response**	
	0,1	**PnP Rev**
	'IPR0210'	**Unique ID (IPR plus revision level)**
	\PRINTER	**Printer**
	\S1000 PcOS	**Model**
	\SC:	**9600,N,8,1**
	Serial Configuration:	**Baud, Parity, Bits, Stop Bits**
	xxH	**Check-sum**
	029H	**End PnP**

Note 1 The model field may be altered to generate PnP ID's other than "S1000 PcOS" by special order.

When the identification is complete, the printer returns to the baud rate specified in the configuration.

Serial Port Inquire

The serial port inquire is more straightforward than parallel mode. The serial acknowledged (ACK) or not acknowledged (NAK) responses follow a uniform format, the ACK or NAK is always followed by the command ID that requested it. This makes the design of the host application easier because the response can be identified and always follows the same format.

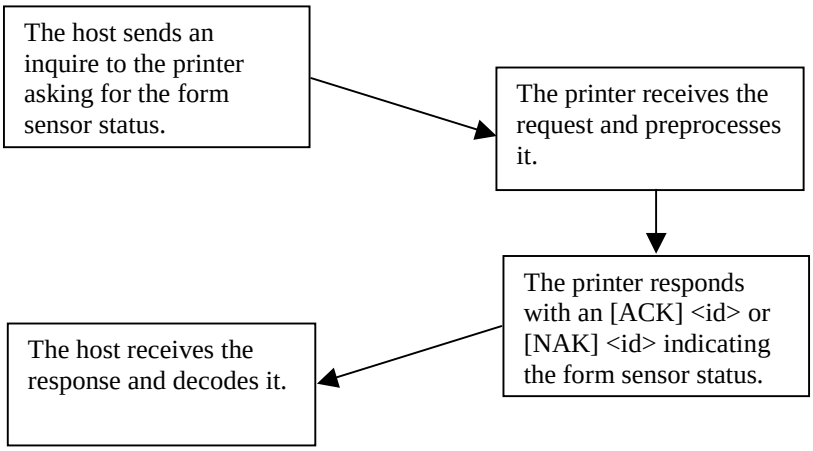

Flow Chart 3 Inquire Flow

The host sends an [ENQ] <id> (form sensor status) request to the printer. The printer responds with an [ACK] <id> indicating that the request was identified, status true.

Inquire commands affect the printer's performance. Communication is a high priority for the printer. Inquire commands take processing time away from the print tasks. It is possible to ask for so much status that the printer slows. In serial mode, it is important that the response to an inquiry is received by the host before another command is issued. When an inquiry is received by the printer, it is buffered in a high-speed processing queue. When the printer has time, it empties the queue and processes the inquiries. The printer responds to the command as soon as the second byte of the command is taken from the high-speed buffer. If the host is looking for a form to be inserted, it should not send status requests as fast as it can. The host will receive a response to all of them. If the host did not wait for a response to each, there would be unnecessary responses.

In IEEE 1284 mode, inquire responses are placed in an IEEE 1284 transmit queue. When the IEEE 1284 reverse channel is open, the responses are returned to the host. It is important that after each request the reverse channel be opened. Inquire responses remain in the queue until read. If the [ENQ] <9> command is sent to the printer, the IEEE 1284 buffer will be cleared, and only the response to the [ENQ] <9> will remain.

Display Pass Through

The display pass through feature allows a pole display to be interconnected with the printer. The printer is connected to a host system with a special serial cable. The host sends serial data to the printer and the printer sends serial data to the pole display. The printer does not provide power to the display. During normal printer operation, no data is passed to the display. In pass through mode, all received data is passed on to the display.

Pass Through Restrictions and Considerations

1. Pass through only works on serial printers with DTR flow control.
2. XON/XOFF mode does not work correctly.
3. All inquire ([ENQ]) commands are active when not in actual pass through mode. If, for example, an [ENQ] command for cash drawer status is received by the printer, the response is transmitted. When pass through is active, all data except the [ENQ] is passed. The printer does not look for or act on any commands other than inquires.
4. If pass through data is sent to the printer in continuous mode (i.e. as fast as possible), each [ENQ] character in the sequence delays the transmit data by one byte. The printer buffer size is limited. If the buffer overruns, data will be lost.
5. Modem handshake signals from the printer are not controlled during past through. Their state is set by printer status. Opening the cover toggles the control lines. When the printer cover is open, it accepts data, including all [ENQ] commands. If an [ENQ] # is received when off-line, pass through is entered.
6. Previously buffered data is processed by the printer in pass through mode. Printer performance is degraded by the processing of pass through data.
7. In 8-bit, no parity mode, data is passed through unaltered. In all other modes, the parity is checked, stripped, and then regenerated by the printer.
8. Pass through has no affect on a printer in parallel mode.

Remote Power Control

The POSjet® 1500 Printer has a remote power control command that instructs it to enter OFF. When the command is issued, the printer performs print cartridge maintenance and enters OFF. Unlike pushing the * Button, remote power mode leaves the communications active. All commands except the exit power down command are ignored.

Function	**Remote Power Control**
ASCII	[ESC] y <n>
Hexadecimal	1BH 79H <n>
Decimal	<27> <121> <n>
IPCL	&%YX17 or &%YX18
EPOS	[ESC] y <n>
Where n	17 Requests the printer to enter remote OFF 18 Requests the printer to exit remote OFF
Description	Inquiry (ENQ) commands are accepted and answered in remote power down mode. The printer reactivates if the * Button is pressed or a power up command is received.
Note:	If power is lost after the power down command is issued, the printer remembers it is in power down mode but does not reactivate the communications link. The * Button must be pushed to return the printer to full operation.
Note:	This command is not available in STAR mode.

Remote Printer Reset

Reset in Serial Mode

It is possible to generate a software printer reset in serial mode. The [ENQ] <10> command requests that the printer reset. (This is not a hardware reset). The reset completely initializes the hardware and software, but the printer does not recover from a loss of software control.

Note: If the printer mode was changed by the [ESC] y <2> or <3> command, a soft reset will not return to the power on default.

The command flow follows:

The [ENQ] <10> is acknowledged. During cleanup and initialization, the printer is placed off-line. Before the printer initializes, it tries to clean up its input buffer and other internal processes.

The printer's software is reinitialized.
The power-cycled flag is set.
The print head is homed and re-calibrated.
The printer goes back on-line.

Reset in Parallel Mode

In parallel mode, driving the INIT signal on the parallel port for 100 milliseconds generates a software reset. It takes about two seconds for the printer to recover from a reset. The [ENQ] <10> command has the same effect, but it is not acknowledged.

Miscellaneous Communication Features

Power-cycle Recovery

Sometimes the host needs to know if the printer was power cycled. An example would be after the receipt tape was changed. It is not necessary to turn off the printer to change the receipt. However, if the operator does, any information sent to the printer before the power cycle will be lost.

The POSjet® 1500 Printer has a flag that is set after a reset. The flag stays set until the host requests a reset. The [ENQ] <11> command reads the flag. If the command returns power-cycled status, the power has been reset or power cycled since the last request. All unprinted information has been lost.

If the print operation is critical, it is a good idea to check the power-cycle flag before and after all transactions. An alternate approach is to check the flag after every off-line to on-line transition.

Note: If the printer mode was changed by the [ESC] y <2> or <3> command, a power-cycle reset will return to the initial configuration.

Data Pass-through

The POSjet® 1500 Printer supports data pass-through (sometimes referred to as display pass-through). Data pass-through is activated by the print-suppress command with the pass-through bit set. In pass-through mode, the printer can be requested to transmit any data that it receives. When this is the case, the printer's inquire commands are active but of little use. Typically, the printer's transmit data is connected to the next device in line. Inquire commands have no data path back to the host. If pass-through is to be used, it is a good idea to deactivate the inquire commands. (Use [ESC] y <6>).

Before pass-through data can be used, it must be activated in the configuration menu, which is the third selection in the print-suppress/pass option.

All data after, but not including, the print-suppress command is pass through. When deactivated, the print-suppress command is again not pass through. During pass through the multi-drop commands are active (if configured).

The printer will act upon a multi-drop control command found in the pass-through data. If the printer is deselected during pass-through, it stops passing on the data. When the printer is re-addressed, data pass-through is active.

Multi-drop Configuration

The POSjet® 1500 Printer supports a multi-drop configuration where up to three printers can be connected in parallel. Each printer has a different address A, B, or C. The printer does not accept any print information unless it is addressed. Multi-drop configuration is only available in serial mode, as parallel printers cannot be connected together.

Off-line Active

A configuration flag that prevents the printer from going off-line (in most cases) is available. Off-line mode allows the application to query the printer for status rather than assume a status from the control signals. The feature allows the host application to query the printer at all times except when there is no power; a full input buffer; or a hard failure. For example, when the printer's cover is open, the printer stops printing but still accepts data and inquiries. The inquire cover status command returns, "Cover open."

Hard failures result when there is no power or a printer fault occurs. If the printer is off-line, either the input buffer is full or a hard fault has occurred. The host application should not allow the input buffer to fill.

Section 5:
Color Printing and Print Drivers

The POSjet® 1500 Printer has bit-image graphic capability and a full PC-compatible graphic character set. The bit image format is similar to that used on other personal computer printers. Three modes of operation are available. Single-density is the fastest mode. It makes a single unidirectional 60 dpi print pass. Full-speed double-density mode makes two passes with a half-dot offset. Full-speed double-density mode is half the speed of single-density mode, but it prints at 120 dpi. Half-speed double-density mode is half the speed of full-speed double-density; however, the print quality is enhanced.

Character Graphics

Character graphics is the term for joining individual characters together to produce a mosaic of characters that form a graphic image. The simplest method uses an * (or any other character) to form an image. For example, ITHACA® might be formed as follows.

```
***   ***   *    *    **     ***     **
 *     *    *    *   *  *   *    *   *  *
 *     *    *****   ****   *       ****
 *     *    *    *   *  *   *    *   *  *
***    *    *    *   *  *    ***    *  *
```

Figure 22 Example of Character Graphics

The extended character set of the printer supports line graphic characters that can be combined to form windows and other shapes. For the shapes to join from line to line, the spacing must be set properly. All characters are in a nine-dot-high character cell. The dots are 1/60 inch apart. Therefore, the line spacing should be 10/60 or 1/6 inch. The set fine line space command can be used to set the line spacing. If possible, the spacing should be reduced slightly to overlap the rows, which prevents any white spacing from appearing between the lines. The following example illustrates the use of extended character graphics.

```
[ESC]:
[ESC]3<27>
[ESC]a<1>
<201>
<205><205><205><205><205><205><205><205><205>
<205><205><205><205><205><205><205><205><205>
<205><205><205><205>
<187>[CR][LF]
<186>    PcOS PRINTERS     <186>[CR][LF]
<186>                      <186>[CR][LF]
<186>    MADE TO ORDER     <186>[CR][LF]
<186>    BUILT TO LAST     <186>[CR][LF]
<200>
<205><205><205><205><205><205><205><205><205>
<205><205><205><205><205><205><205><205><205>
<205><205><205><205>
<188>[CR][LF]
[ESC]a<0>
[ESC]0
[ESC][P<15>
[CR][LF]

ST# 2000  OP# 00067  TE# 021 0035[CR][LF]
KLEENEX FAM  D04 QTY 1     1.68 J[CR][LF]
RITZ         D01 QTY 1     2.50 D[CR][LF]
CHIPS        D01 QTY 1     1.50 D[CR][LF]
STORAGE BAG  D04 QTY 1     1.50 J[CR][LF]
               SUB TOTAL   7.18[CR][LF]
               SALES TAX 1  .50[CR][LF]
                         ------[CR][LF]
               TOTAL       7.68[CR][LF]
               CASH TEND  20.00[CR][LF]
               CHANGE DUE 12.23[CR][LF]
[CR][LF]
[ESC]a<1>
THANK YOU FOR SHOPPING WITH US[CR][LF]
[ESC]a<0>
[CR][LF]
{DATE:0}         {TIME:0}[CR][LF]
[ESC]d<10>
```

Figure 23 Example Commands for a Sample Receipt

```
        PcOS PRINTERS


ST# 2000  OP# 00067  TE# 021 0035
KLEENEX FAM  D04 QTY 1      1.68 J
RITZ         D01 QTY 1      2.50 D
CHIPS        D01 QTY 1      1.50 D
STORAGE BAG  D04 QTY 1      1.50 J
               SUB TOTAL    7.18
               SALES TAX 1   .50
                            -----
               TOTAL        7.68
               CASH TEND   20.00
               CHANGE DUE  12.32

   THANK YOU FOR SHOPPING WITH US

November 11, 1999        10:02:37.34
```

Figure 24 Sample Receipt

When printing line graphics, the data path to the printer must be eight bits. Seven-bit serial protocols do not access the extended characters. The extended characters require that the form be reverse fed. Consequently, printing line graphics on the receipt may be less than acceptable.

APA Graphics

The printer is capable of all-points-addressable (APA) or horizontal graphics. Generating a graphic image by hand is time consuming and tedious. It is recommended that a graphic package be used to create a graphic image. The following procedure will help with the setup.

Creating an APA graphics file

1. Generate the graphic image in the program of your choice. APA graphics only support monochrome images.

2. Make sure the paper size chosen fits the printer (3 inches wide with 0.25-inch margins). If the paper size cannot be set, print a portion of the page.

3. Print the graphic to a file using a generic, IBM, graphic, 9-pin driver. The standard IBM resolutions are 240 x 216 dpi, 120 x 72 dpi, and 60 x 72 dpi. The POSjet® 1500 Printer supports all three resolutions. For good resolution with reasonable speed, use 120 x 72 dpi.

4. Print the graphic image to a file.

5. Edit the resulting file to remove any unwanted form control, and insert the POSjet® 1500 form control.

6. Make the resulting file available to your application, so it can be sent to the printer when required.

Color Graphics

The POSjet® 1500 is a two-color printer. It is not a full color printer. A full color printer forms the various colors of an image by mixing inks of different colors on the paper. The amount of each color determines the hue. Typically the paper is white and no ink produces a white dot. Mixing yellow and cyan produces a red dot and mixing cyan, magenta, and yellow in equal amounts produces a black or gray dot. If the printer has a forth cartridge, it will be black.

The POSjet® 1500 is a two-color printer. It has white (the paper), black (an ink cartridge), and one other premixed color (a red cartridge for example). The printer does not mix the inks on the paper. It either leaves the paper color, prints a black dot, or a color dot. To allow the POSjet® 1500 to use colors other than red, the architecture of the color provides for the sending of three-color plains to the printer.

There are two ways to define colors, CMY and RGB. CMY stands for cyan, magenta, and yellow. Mixing cyan, magenta, and yellow can be compared to blending paint. When cyan, magenta, and yellow are mixed, the result is black. RGB stands for red, green, and blue. Mixing red, green, and blue together can be compared to blending light beams. When the lights are turned off, everything looks black. When all the lights are on, the result is white. Because the POSjet® 1500 Printer does not mix colors, either CMY or RGB color definitions work.

For the POSjet® 1500 Printer, RGB color definition was chosen because the colors are closer to those most often used in print, and as a result, RGB color definition generally requires sending less data to the printer. It also turns out to be convenient for Windows to generate data because RGB color definition is the same as the display.

The printer does not have a gray scale and cannot print various hues of color. Therefore, only two bits per pixel are required. To allow multicolor support, three bits per pixel are available. (Compression reduces the data back to two bits). After the data is decompressed in the printer, each dot contains three bits of information. The color print algorithm follows.

Color Bits Received			**Second Cartridge Color**					
			Red		**Green**		**Blue**	
Red	**Green**	**Blue**	**Black**	**Red**	**Black**	**Green**	**Black**	**Blue**
OFF	OFF	OFF	X		X		X	
ON	ON	ON						
ON	OFF	OFF		X				
OFF	ON	OFF				X		
OFF	OFF	ON	X		X			X
ON	ON	OFF		X		X	X	
OFF	ON	ON	X			X		X
ON	OFF	ON	X		X			X

Table 11 Color Bits Received

The Ithaca® Windows print driver provides the translation from Windows color to the three-color plains. When a graphic is created for the POSjet® 1500 Printer, the colors used must take into account that colors other than the pen color will print black. The Ithaca® Windows driver helps adjust the color content and generates the desired print from a full color image. *(Ithaca® Windows print driver patent pending.)*

Procedure for Color Horizontal Graphics:

1. Generate the graphic image in the program of your choice. Use colors consistent with the two colors in the printer.

2. Optionally, process the color image with the Ithaca® color image processor. The program can print the image or generate a printable file.

3. Make sure the paper size you pick fits the printer (3 inches wide with 0.25-inch margins).

4. The POSjet® 1500 print driver should be installed (even if the printer is not connected).

5. Set up the print driver to print the graphic to a file using whatever resolution required.

6. Print the graphic image to a file.

7. When you want to print the graphic, simply copy the file to the printer.

8. You may copy the graphic to the graphic save buffer and then request the printer to retrieve and print it without re-sending the graphic data.

(Ithaca® Color Image Processor is patent pending.)

Figure 25 Receipt with graphics

As with all graphics, the data path to the printer must be eight bits. Seven-bit protocols do not work.

Section 6: Printer Drivers and Printer Controls

General Driver Information

The following information provides a brief desciptive overview of each of the printer drivers that the POSjet® 1500 can be integrated with:

Windows Printer Driver:

A Windows printer driver is a Microsoft specific, Microsoft defined, type of driver that the OS uses to translate drawing commands by a Window's application to a specific printer's command set. A window's printer driver is a graphics page mode driver. It is not a POS (Point of Sale) driver. A Windows Printer Driver should be used when writing a program that uses the Window's API to send print information to the printer. Do not attempt to use a printer driver when a program wants to send printer command codes to the printer or when a program wants to get information back from a printer.

OPOS Driver:

An OPOS Driver is not a printer driver.
An OPOS driver is a POS device driver that an application uses to get a POS device to do something. Types of OPOS drivers are POSPrinter, Scanner, Cash drawer, Pole Display, MICR, and Scale. An OPOS Driver should be used when you want to be able to access all the features of the POS device and you do not want to send printer/device specific commands to the printer/device. OPOS Driver are also used when you want to get information back from the device in a standard (OPOS) way, or when you want to be able to use devices from different vendors. Do not use OPOS Drivers when attempting to send device specific commands to the device/printer.

POSPrinter ActiveX Control (OCX):

This is not a driver; it is a software component that provides a connection from an application to a port driver. This allows an application to communicate "directly" with a printer. This approach allows an application to send the commands, it wants to, to the printer and is similar to the "DOS way" of talking to a POS printer. Active X Controls should be used when attempting to **control** what is sent to the printer. When using Active X Controls it is very important to send the correct codes to the printer as well as detecting error conditions with the printer and graceful recovery from error situations. Do not use Active X Controls if you do not want to deal with any low-level commands sent to the printer.

Installing Windows™ Printer Drivers (WIN95, 98, Me)

1. Insert the **"Windows 98, 98, Me printer driver"** floppy disk into your diskette drive.
2. Click on **"Start" menu -> "Settings" -> "Printers"**.
3. Double Click on **"Add Printer"** Icon.
4. Select **"Next"**.
5. Select **"Local Printer"** and **"Next"**.
6. Click on **"Have Disk"**, if your floppy is A: use A:\ and then **"OK"**.
7. Select the printer you have (ie. Series 1000) and then "Next"
8. If you are asked **"Keep existing driver"** or **"Replace Existing Driver"**. Choose **"Replace existing driver"** and then **"Next"**.
9. Select the port the printer is connected to, and then **"Next"**.
10. Select **"Yes" or No"** for default printer, Printer name should not be altered, so choose **"Next"**.
11. If you wish, you can print a test page. Although, due to the narrow paper stock that this printer uses and the margins windows chooses, there will not be enough room to print all the images of the test page. Some of the large text will word wrap and be truncated.
12. Select **"Finish"**. The printer driver is now installed.
13. If you selected **"Replace existing driver"**, reboot your machine to ensure all components are installed.

Printer Driver Installation Instructions for NT4.0, 2000

1. Insert the **"Windows NT, 2000 printer driver"** floppy disk into your diskette drive.
2. Click on **"Start" menu -> "Settings" -> "Printers"**.
3. Double Click on **"Add Printer"** Icon.
4. Select **"My Computer"** and **"Next"**.
5. Select the port the printer will be connected to, and then **"Next"**.
6. Click on **"Have Disk"**, if your floppy is A: use A:\ and then **"OK"**.
7. Select the printer you have (ie. Series 1000) and then **"Next"**.
8. If you are asked **"Keep existing driver"** or **"Replace existing driver"**. Choose **"Replace existing driver"** and then **"Next"**.
9. Printer name should not be altered, so choose **"Next"**.
10. Select **"Not Shared" -> "Next"**.
11. If you wish, you can print a test page. Although, due to the narrow paper stock that this printer uses and the margins windows chooses, there will not be enough room to print all the images of the test page. Some of the large text will word wrap and be truncated.
12. Select **"Finish"**. The printer driver is now installed.
13. If you selected **"Replace existing driver"**, reboot your machine to ensure all components are installed.

OPOS Drivers Installation Instructions

Run SetupOPOS.exe.

The communications will be defaulted to **"COM2"**. If the communication port is not setup at installation, the first time the printer service object Open method is called, a Comm port setup dialog will be displayed. After running Setup.exe there will be a OPOS setup utility in the OPOS program group/start menu and also in the control panel. Use this utility to setup the OPOS printer **"driver"** and cash drawer **"driver"**. To Install the USB drivers:

Ensure that USB is enabled in your system's BIOS. To verify that USB is enabled, Click on **"Start"**, **"Settings"**, **"Control Panel"**. Double click **"System"** and select the **"Device manager"**. If you see "Universal Serial Bus Controllers" in the list, USB is enabled. Check your PC's documentation for more information about USB if needed. Ensure that power is applied to the printer and plug in the USB cable to both the PC and printer.

Follow the on screen directions. Please note that several drivers are installed in this process. Therefore the **"Found new hardware"** prompt will appear several times. If the system needs, direct it to the location of the USB driver install disk (usually the floppy drive).

See **"readme.txt"** or **"usbman.htm"** on the install disk for more information.

To Install the USB drivers

1. Ensure that USB is enabled in your system's BIOS. To verify that USB is enabled, Click on **"Start"**, **"Settings"**, **"Control Panel"**. Double click **"System"** and select the **"Device manager"**. If you see **"Universal Serial Bus controllers"** in the list, USB is enabled. Check you PC's documentation for more information about USB if needed.

2. Ensure that power is applied to the printer and plug in the USB cable to both the PC and printer.

3. Follow the on screen directions. Please note that several drivers are installed in this process. Therefore the "Found new hardware" prompt will appear several times. If the system needs, direct it to the location of the USB driver install disk (usually the floppy drive).

See "readme.txt" or "usbman.htm" on the install disk for more information.

Configuring Windows™ Printer Drivers (WIN95, 98, Me)

The standard Window's printer driver configuration properties are described in the operating system's help under the "printers" topic. The Ithaca specific configuration is described below.

Start/EndDoc Tab

Uses these setting to cause additional actions to happen at the start and end of a document.

Additional StartDoc Commands:
This is where you place text and binary commands that you want sent to the printer before a document is printed.

Additional EndDoc Commands:
This is where you place text and binary commands that you want sent to the printer after a document is printed.

Line Feeds:
This is where you enter the number of line feeds that will be done after a document is printed.

Cut Receipt:
This option will send a cut command to the printer after the document is printed.

Fire Cash drawer 1:
This option will send a fire cash drawer 1 command to the printer after the document is printed.

Fire Cash drawer 2:
This option will send a fire cash drawer 2 command to the printer after the document is printed.

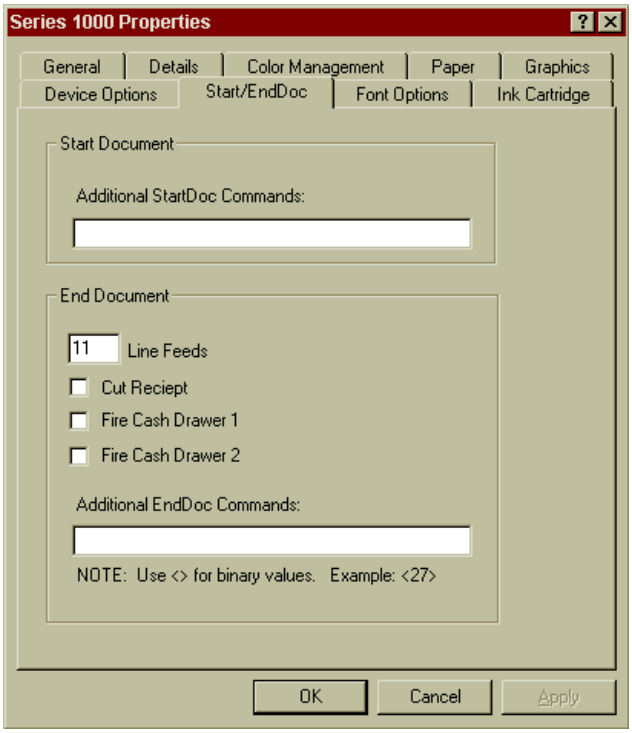

Note: For these options to work the printer driver must be in "bi-directional" mode. To check this, go to "Details" tab, "Spool settings". For NT and Win 2000, go to the "ports" tab.

Font Options Tab (Win 9x/Me only)

These options control how font processing is handled in the printer driver.

Note: Selecting "Always map fonts to device resident fonts" causes the printer driver to behave in a way that is not how the operating system expects a printer driver to operate. This is not the default mode of operation and can cause the printed output to vary a lot depending on the settings you choose.

True Type Fonts
These settings control capability flags that are reported to the operating system.

Device Fonts:
These settings control how printer resident fonts get selected. These settings force the driver to behave in a non-standard way. These "Device Font" settings can make up for an application that does not select a printer resident font.

Additional Text formatting
These settings control how text gets printed in the print zone and the spacing between lines.

Line Truncation Control
These settings control how a line that is too long to fit is handled.

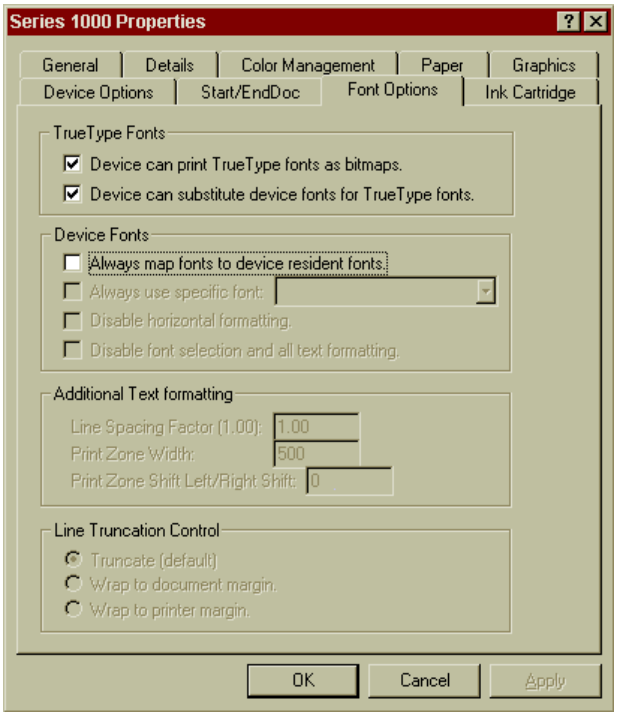

Note: The custom printer driver settings are stored in the Window's system registry. These custom settings persist even if you uninstall the driver. You can view, edit, and delete these setting via RegEdit.exe that comes with Windows. Using RegEdit.exe can render you system unusable and lead to a loss of data on your computer, extreme caution should be used when editing the system registry. You should backup you registry before you edit it (see Window's help for more information).

It is recommended that the custom settings be changed via the printer's property pages as discussed previously in this document.

To view, edit, or delete the custom settings

Go to the Windows operating system's start RegEdit.exe and go to HKEY_LOCAL_MACHINE\SOFTWARE\PcOSPrinter\Series_1000 for the Series 1000 printers.

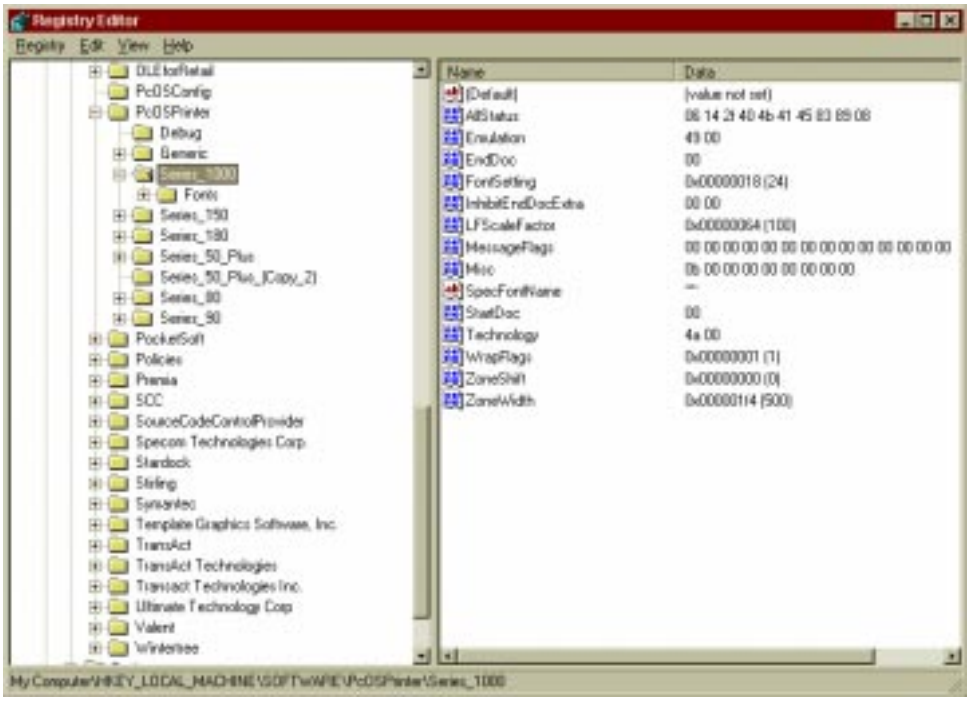

Configuring Ithaca OPOS Drivers

To configure the OPOS drivers, either run the “Ithaca OPOS Setup” in the control panel or run the configuration via the “Start” menu, “Programs”, “Ithaca OPOS”, “Ithaca OPOS Setup”. You must choose the communications port (and the port setting in the case of a serial port). At the OPOS printer configuration you can set the following.

Printer driver

Choose the printer that you are using. “SeriesAutoDetect” can automatically detect which printer is connected. This auto detection will allow switching of Ithaca series printers without changing host system settings.

Rename:
This will allow you to rename the OPOS device name. Some applications look for a specific name for the device to use. This renaming will accommodate an application of this type.

Remove:
This will allow you to remove an OPOS device from the system.

Set as Only:
This will allow you to set this device as the only device of this type (printer). Some applications look for the first device name for the device to use. To ensure that a device is the first one, use this setup feature. Caution should be exercised when using this setup feature, this “Set as Only” will remove all other OPOS devices of this type (printer). Note: An entry may be first alphabetically, but not first to be enumerated by the operating system.

Printing

Default Characters Per Line:
This is the default number of character per print line. The number of characters per line is typically set by the application. If the application does not set the number of characters per line, this default will be used.

Line Feed Scale Factor:
This controls the base/default line height/spacing. Increase this value for a larger line spacing.

Fast Bitmap Printing:
Set to have bitmaps print in the fastest mode possible (while xxxLetterQuality is false). If xxxLetterQuality is set to true, the “Fast Bitmap Printing” option is overridden and bitmaps are printed in high quality mode. If “Fast Bitmap Printing” is off and xxxLetterQuality is set to false, bitmaps are printed in a medium quality mode.

Double High = Double Line Feed:
If set, when a line feed is encountered after double high print is requested, a double line feed will be done.

Print Red as Bold:
If set, a request for alternate color print (red) will be printed as bold.

Truncate Trailing Spaces:
If set, spaces on the end of a line of text will be removed. This truncation can be used to prevent unwanted line wrapping.

General Settings

Paper Low = Paper Out:
If set, paper low will not be reported until paper is out.

Inhibit Events:
If set, events will not be generated.

Error Events Asynchronous Mode Only:
Set to enable firing error events while in Asynchronous mode only. If not set, error events will be fired in both Asynchronous and Synchronous modes.

Set Error String on Synchronous Error:
If set, the ErrorString will be set when an error occurs while calling a method in synchronous mode. Otherwise it will only be set in asynchronous mode.

Synchronous Time Out:
Time in milliseconds a synchronous print method will wait before returning a OPOS_E_TIMEOUT. If set to -1 (0xffffffff), a synchronous print method will never time out (default).

Synchronous Error Wait:
Time in milliseconds a synchronous print method will wait for an error condition to be removed before returning an error. If the error condition is removed before this time has elapsed, the print method will be processed.

Performance

Background Status Updating:
If set, printer status will be updated in the background. This background updating will increase performance. This performance increase is because when a print request is made the status is obtained from a previous background read and not when the print method is called. This is especially important using a parallel interface, being that the parallel interface operates in half duplex.

Printer Never Busy:
If set, the printer service object ("driver") will report that the printer is not/never busy. This will greatly increase synchronous printing performance. Synchronous print calls will not wait for the printer to actually be idle. It should be noted that this "never busy" mode is not strictly compliant with the OPOS specification. This performance increase is especially important using a parallel interface, being that the parallel interface operates in half duplex.

Communications Port:

Port Name:
This is the name of the communications port (ie. COM2, LPT1).

Setup Comm Port:
This will display a communications setup dialog. You will be able to set things such as baud rate and handshaking. Note: these settings must match the printer you are using.

I/O Time Out Factor:
This controls how long the driver waits for I/O. Its value can range from 10 to 2000. The smaller this value is, the more responsive the application will be when the printer is off or disconnected.

Paper Out:

Ignore Paper Out:
If this is selected, the print functions will still attempt to print to the printer even when paper out is sensed. This functionality is provided to maximize paper use on the Series 90 printer that reports paper out as a function of the number of print lines since paper low is sensed. Use on printers other than the Series 90 is not recommended. You must have printer configuration "Paper Out Mode" set to "Disabled" to use this functionality.

Do not Report Paper Out:
If this is selected, the printer driver will not report that paper is out even when paper out is sensed. This functionality is provided to maximize paper use on the Series 90 printer that reports paper out as a function of the number of print lines since paper low is sensed. Use on printers other than the Series 90 is not recommended. You must have printer configuration "Paper Out Mode" set to "Disabled" to use this functionality.

Cash Drawer Dialog

Drawer 1 or 2:
Select which drawer is the default cash drawer that is fired. This default setting can be overridden at run time via "DirectIO". See: "PcOS OPOS Reference Manual" (PcOSOPOS.doc) for more information.

Drawer Open Status Immediately:
If set, the driver will begin to report that the cash drawer is open as soon as the command is given to open the drawer. This option is provided to allow for applications that expect different event timing than the hardware generates.

Reverse Drawer Open Sensor Detection:
Some cash drawer sensors are wired opposite than expected (ie Normally open NO vs Normally closed NC). This setting allows for a cash drawer whose sensor is connected differently than expected.

Number of Drawer Open Retries:
If non-zero and the cash drawer fails to open, the cash drawer driver will try to re-fire the cash drawer at approx. 2 seconds intervals the number of times specified.

Wait For Drawer Open Timeout:
This is the time that the OpenDrawer() function will wait for the cash drawer to open. If the drawer does not open within this time, the function will return an OPOS_E_TIMEOUT. If set to -1 (0xffffffff), OpenDrawer() method will never time out.

Message Beep Type:
Normally set to -1. When set to -1 will use PCs speaker as a beeper. This value is passed to the windows API MessageBeep() function.

Drawer Wait Timeout:
Time in milliseconds that WaitForDrawerClose() method will wait before returning a OPOS_E_TIMEOUT. If set to -1 (0xffffffff), WaitForDrawerClose() method will never time out.

Printing using a printer driver (Printer Font)

See the documentation that comes with Visual Basic for detailed information on all the function calls that can be made to print via the Windows Printer drivers.

```
'SELECT OUR PRINTER BY NAME
For Each x In Printers
   If x.DeviceName Like "Series 1000" Then
      Set Printer = x
      Exit For
   End If
Next

'SELECT FONT BY NAME
Printer.FontName = "NLQ 10cpi"
Printer.Print "     20 Bomax Rd"
Printer.Print "   Ithaca, NY 14850"

Printer.Print ""
Printer.Print ""
Printer.Print ""

Printer.FontName = "Draft 16cpi"

'SELECT BOLD PRINT
Printer.Font.Bold = True
Printer.Print "ITEM                    PRICE"
Printer.Font.Bold = False

Printer.Print "Cheese Wiz                  $1.49"
Printer.Print "Crackers                    $2.59"
Printer.Print "Laundry Soap                 $3.29"
Printer.Print "Printer Paper                $3.89"
Printer.Print "Rubber Bands                 $ .99"
Printer.Print "Soda                        $1.49"
Printer.Print "Candy                       $2.29"
Printer.Print "-------------------------------------"
Printer.Print "        Sub Total           $16.03"
Printer.Print "        Tax         $1.28"
Printer.Font.Bold = True
Printer.Print "        TOTAL               $17.31"
Printer.Font.Bold = False
Printer.Print "        -------------------------"
Printer.Print "        Cash        $20.00"
Printer.Print ""
Printer.Font.Bold = True
```

```
'CHANGE COLOR
Printer.ForeColor = RGB(255, 0, 0)
Printer.Print "        Change Due                $2.69"
Printer.ForeColor = RGB(0, 0, 0)
Printer.Font.Bold = False

Printer.Print ""
Printer.Print ""
Printer.Print ""
Printer.Print ""

Printer.EndDoc
```

Printing via a printer driver (System/Graphical/TrueType Font)

This is the preferred way to print via a Windows printer driver to a page printer.

```
'SELECT OUR PRINTER BY NAME
For Each x In Printers
   If x.DeviceName Like "Series 1000" Then
      Set Printer = x
      Exit For
   End If
Next

'SET FONT SIZE
Printer.FontSize = 10

'SELECT FONT BY NAME
Printer.FontName = "Arial Black"
Printer.CurrentX = 1000
Printer.Print "20 Bomax Rd"
Printer.CurrentX = 800
Printer.Print "Ithaca, NY 14850"

Printer.Print ""
Printer.Print ""
Printer.Print ""

'SELECT FONT BY NAME
Printer.FontName = "Arial"

'SELECT BOLD PRINT
Printer.Font.Bold = True
```

```
'SET PRINT POSITION
LinePos = Printer.CurrentY
Printer.Print "ITEM"
Printer.CurrentX = 2800
Printer.CurrentY = LinePos
Printer.Print "PRICE"
Printer.Font.Bold = False

LinePos = Printer.CurrentY
Printer.Print "Cheese Wiz"
Printer.CurrentX = 2900
Printer.CurrentY = LinePos
Printer.Print "$1.49"

LinePos = Printer.CurrentY
Printer.Print "Crackers"
Printer.CurrentX = 2900
Printer.CurrentY = LinePos
Printer.Print "$2.59"

LinePos = Printer.CurrentY
Printer.Print "Laundry Soap"
Printer.CurrentX = 2900
Printer.CurrentY = LinePos
Printer.Print "$3.29"

LinePos = Printer.CurrentY
Printer.Print "Printer Paper"
Printer.CurrentX = 2900
Printer.CurrentY = LinePos
Printer.Print "$3.89"

LinePos = Printer.CurrentY
Printer.Print "Rubber Bands"
Printer.CurrentX = 2900
Printer.CurrentY = LinePos
Printer.Print "$  .99"

LinePos = Printer.CurrentY
Printer.Print "Soda"
Printer.CurrentX = 2900
Printer.CurrentY = LinePos
Printer.Print "$1.49"
```

```
LinePos = Printer.CurrentY
Printer.Print "Candy"
Printer.CurrentX = 2900
Printer.CurrentY = LinePos
Printer.Print "$2.29"

Printer.CurrentY = Printer.CurrentY + 100
Printer.Line (0, Printer.CurrentY)-(3600, Printer.CurrentY)
Printer.CurrentY = Printer.CurrentY + 100

LinePos = Printer.CurrentY
Printer.CurrentX = 1300
Printer.Print "Sub Total"
Printer.CurrentX = 2800
Printer.CurrentY = LinePos
Printer.Print "$16.03"

LinePos = Printer.CurrentY
Printer.CurrentX = 1300
Printer.Print "Tax"
Printer.CurrentX = 2900
Printer.CurrentY = LinePos
Printer.Print "$1.28"

Printer.Font.Bold = True

LinePos = Printer.CurrentY
Printer.CurrentX = 1300
Printer.Print "TOTAL"
Printer.CurrentX = 2800
Printer.CurrentY = LinePos
Printer.Print "$17.31"

Printer.Font.Bold = False

'Printer.Print "---------------------------"

Printer.CurrentY = Printer.CurrentY + 100
Printer.Line (1300, Printer.CurrentY)-(3600, Printer.CurrentY)
Printer.CurrentY = Printer.CurrentY + 100

LinePos = Printer.CurrentY
Printer.CurrentX = 1300
Printer.Print "Cash"
Printer.CurrentX = 2800
```

```
Printer.CurrentY = LinePos
Printer.Print "$20.00"

Printer.Print ""

Printer.Font.Bold = True

'CHANGE COLOR
Printer.ForeColor = RGB(255, 0, 0)
LinePos = Printer.CurrentY
Printer.CurrentX = 1000
Printer.Print "Change Due"
Printer.CurrentX = 2900
Printer.CurrentY = LinePos
Printer.Print "$2.69"
Printer.ForeColor = RGB(0, 0, 0)
Printer.Font.Bold = False

Printer.Print ""
Printer.Print ""

Printer.EndDoc
```

Printing via an OPOS driver

There are 3 Modes of printing.

1. Synchronous mode, printing is done before the print function returns, banking.
2. Asynchronous mode, print function returns as soon as it can, printing may or may not be done yet.
3. Transaction mode buffers all print data and the print data is sent all at once.

See the documentation that comes with the Ithaca OPOS drivers for detailed information on all the function calls that can be made via the OPOS drivers.

OPOS drivers are first “Opened”, “Claimed” and “Enabled” before they can be used. This is typically done when the application starts (Form Load in VB).

```
CallResult = Printer1.Open("SeriesAutoDetect")
Printer1.Claim (6000)
Printer1.DeviceEnabled = True
```

Then the device is used (i.e. printing is done)

```
Dim Data As String
‘SET NUMBER OF CHARACTERS PER LINE
Printer1.RecLineChars = 33
```

```
Data = "*********************************" + Chr(13) + Chr(10)
CallResult = Printer1.PrintNormal(PTR_S_RECEIPT, Data)
Data = "*                               *" + Chr(13) + Chr(10)
CallResult = Printer1.PrintNormal(PTR_S_RECEIPT, Data)
Data = "*         Fast Mart             *" + Chr(13) + Chr(10)
CallResult = Printer1.PrintNormal(PTR_S_RECEIPT, Data)
Data = "*                               *" + Chr(13) + Chr(10)
CallResult = Printer1.PrintNormal(PTR_S_RECEIPT, Data)
Data = "*********************************" + Chr(13) + Chr(10)
CallResult = Printer1.PrintNormal(PTR_S_RECEIPT, Data)
Data = Chr(13) + Chr(10) + Chr(10) + Chr(10) + Chr(10)
CallResult = Printer1.PrintNormal(PTR_S_RECEIPT, Data)

Data = Chr(27) + "|rA" + "Bread          1.49" + Chr(13) + Chr(10)
CallResult = Printer1.PrintNormal(PTR_S_RECEIPT, Data)
Data = Chr(27) + "|rA" + "Milk           2.19" + Chr(13) + Chr(10)
CallResult = Printer1.PrintNormal(PTR_S_RECEIPT, Data)
Data = Chr(27) + "|rA" + "Rice            .99" + Chr(13) + Chr(10)
CallResult = Printer1.PrintNormal(PTR_S_RECEIPT, Data)
Data = Chr(27) + "|rA" + "Soup           2.49" + Chr(13) + Chr(10)
CallResult = Printer1.PrintNormal(PTR_S_RECEIPT, Data)
Data = Chr(27) + "|rA" + "Nuts         3.49" + Chr(13) + Chr(10)
CallResult = Printer1.PrintNormal(PTR_S_RECEIPT, Data)

Data = Chr(27) + "|rA" + Chr(13) + Chr(10) + "--------------------------" + Chr(13) +
Chr(10)
CallResult = Printer1.PrintNormal(PTR_S_RECEIPT, Data)
Data = Chr(27) + "|rA" + "TOTAL           10.65" + Chr(13) + Chr(10)
CallResult = Printer1.PrintNormal(PTR_S_RECEIPT, Data)

Data = Chr(13) + Chr(10) + Chr(10) + Chr(10) + Chr(10)
CallResult = Printer1.PrintNormal(PTR_S_RECEIPT, Data)

Data = "Thank you for Shopping with us" + Chr(13) + Chr(10)
CallResult = Printer1.PrintNormal(PTR_S_RECEIPT, Data)
Data = "Come again soon" + Chr(13) + Chr(10)
CallResult = Printer1.PrintNormal(PTR_S_RECEIPT, Data)


Data = Chr(27) + "|90fP"
CallResult = Printer1.PrintNormal(PTR_S_RECEIPT, Data)
```

When the device is no longer needed it is "Disabled", "Released" and "Closed". This is typically done when the application is being shutdown. (Form Unload in VB)**.**

```
Printer1.DeviceEnabled = False
Printer1.Release
Printer1.Close
```

Setting Fonts, Justification (left, right, center), Bold, Double wide/high, ... (from vbtest)

```
'Font Typeface #1
data = Chr(27) + "|1fT" + "Font Typeface #1" + Chr(10)
CallResult = Printer1.PrintNormal(PTR_S_RECEIPT, data)

'Font Typeface #2
data = Chr(27) + "|2fT" + "Font Typeface #2" + Chr(10)
CallResult = Printer1.PrintNormal(PTR_S_RECEIPT, data)

'Font Typeface #3
data = Chr(27) + "|3fT" + "Font Typeface #3" + Chr(10)
CallResult = Printer1.PrintNormal(PTR_S_RECEIPT, data)

'Font Typeface #0
data = Chr(27) + "|0fT" + "Font Typeface #0 (default)" + Chr(10)
CallResult = Printer1.PrintNormal(PTR_S_RECEIPT, data)

'Bold
data = "This is " + Chr(27) + "|bC" + "Bold" + Chr(10)
CallResult = Printer1.PrintNormal(PTR_S_RECEIPT, data)

'Underline
data = "This is " + Chr(27) + "|uC" + "Underline" + Chr(10)
CallResult = Printer1.PrintNormal(PTR_S_RECEIPT, data)

'Italic
data = "This is " + Chr(27) + "|iC" + "Italic" + Chr(10)
CallResult = Printer1.PrintNormal(PTR_S_RECEIPT, data)

'2xWide
data = "This is " + Chr(27) + "|2C" + "2xWide" + Chr(10)
CallResult = Printer1.PrintNormal(PTR_S_RECEIPT, data)

'2xHigh
data = "This is " + Chr(27) + "|3C" + "2xHigh" + Chr(10)
CallResult = Printer1.PrintNormal(PTR_S_RECEIPT, data)

'2xWide 2xHigh
data = "This is " + Chr(27) + "|4C" + "2xWH" + Chr(10)
CallResult = Printer1.PrintNormal(PTR_S_RECEIPT, data)
```

'2x Normal

```
data = "This is " + Chr(27) + "|4C" + "2x" + Chr(27) + "|1C" + " to Normal" + Chr(10) + Chr(10)
CallResult = Printer1.PrintNormal(PTR_S_RECEIPT, data)
```

'Left

```
data = "This is Left" + Chr(10)
CallResult = Printer1.PrintNormal(PTR_S_RECEIPT, data)
data = "This is More Left Text" + Chr(10)
CallResult = Printer1.PrintNormal(PTR_S_RECEIPT, data)
data = "This is Less" + Chr(10) + Chr(10)
CallResult = Printer1.PrintNormal(PTR_S_RECEIPT, data)
```

'Center

```
data = Chr(27) + "|cA" + "This is Centered" + Chr(10)
CallResult = Printer1.PrintNormal(PTR_S_RECEIPT, data)
data = Chr(27) + "|cA" + "This is More Centered Text" + Chr(10)
CallResult = Printer1.PrintNormal(PTR_S_RECEIPT, data)
data = Chr(27) + "|cA" + "This is Less" + Chr(10) + Chr(10)
CallResult = Printer1.PrintNormal(PTR_S_RECEIPT, data)
```

'Right Justified

```
data = Chr(27) + "|rA" + "This is Right Justified" + Chr(10)
CallResult = Printer1.PrintNormal(PTR_S_RECEIPT, data)
data = Chr(27) + "|rA" + "This is More Right Justified Text" + Chr(10)
CallResult = Printer1.PrintNormal(PTR_S_RECEIPT, data)
data = Chr(27) + "|rA" + "This is Less" + Chr(10) + Chr(10)
CallResult = Printer1.PrintNormal(PTR_S_RECEIPT, data)
```

'Paper feed (RecLinesToPaperCut) and cut

```
data = "Feed(RecLinesToPaperCut) cut" + Chr(10)
CallResult = Printer1.PrintNormal(PTR_S_RECEIPT, data)
```

data = Chr(27) + "|90fP"

```
CallResult = Printer1.PrintNormal(PTR_S_RECEIPT, data)
```

Printing via POSPrinter OCX

See the documentation that comes with the POSPrinter OCX for detailed information on all the function calls that can be made with the POSPrinter OCX.

```
Dim StrData As String
Result = POSPrinter1.SetHandshake(2)
'Result = POSPrinter1.OpenPort("LPT1:", "")
Result = POSPrinter1.OpenPort("COM2:", "baud=9600 parity=N data=8 stop=1")
If Result <> 1 Then
MsgBox "OpenPort failed, make sure no other devices are using this port."
End If

StrData = "Hello World" + Chr(13) + Chr(10)

Result = POSPrinter1.SendString(StrData, Len(StrData))
If Result <> 1 Then
MsgBox "SendString failed, Ensure that the printer is connected to the port."
End If

Result = POSPrinter1.SendString(Chr(5) + Chr(21), 2)
StrData = POSPrinter1.ReadString(100)

Result = POSPrinter1.ClosePort()
```

Section 7: POSjet® 1500 Features/Specifications

Standard Features

- Print Speed: 12 lps. at 10 char. per line
- Print Resolution: Max. 208 dpi. Horizontal, 96 dpi. Vertical
- Simple Snap-In, No-Mess Cartridges with Fast-Drying Ink
- Standard Warranty: Two Years (Extended Maintenance Plan Available)
- Pantented Insta-Load™ Automatic Paper Loading
- Cash Drawer Drivers: Dual with Status (Single RJ12)
- Font Selections: Draft, Large Draft and Near Letter Quality
- Selectable Printing Features of Bold, Italics, Size Scaling and Rotated
- Emulations: Ithaca/IBM, Epson ESC/POS, and TM-U325, Star, Citizen
- APA and Epson Bit Map Graphics
- Data Buffer: 8K (Adjustable)
- 208K Non-Volatile Flash for Multiple Character Sets, Bit Images and EJ
- Bar Codes: Code 39, Code 93, Interleaved 2 of 5, UPC-A and UPC-E, EAM8 and EAN13, Code 128
- 65 Language Character Sets Supported (EURO Character Included)
- Self Diagnostics
- Remote Statistics
- Paper Out and Ink Low Detection and Indicators
- Software Developer's Toolkit Available
- Top Drop-in Forms Insertion with Programmable Top of Form
- Independent Validation

Optional Features

- Auto-cutter (partial cut)
- Adjustable paper low
- Buzzer
- Two-Color Printing
- Univeral Power Supply and PowerPocket™

Additional Supported devices and tools

Printer Test and Configuration Programs

The POSjet® 1500 will be supported by various PC based tools. These tools include but are not limited to the following:

PJColorII

PJColorII is a program that will allow images and picture to be processed so they can work with the printer.

PJTerminal

PJTerminal is a test application that is used to verify communications to the printer.

PJBootload

PJBootload is a program that is used to replace or update the printer's firmware.

Ithaca Config

Ithaca Config is a program that is used to replace or update the printer's configuration settings.

Drivers and Utilities Available

POSjet® 1500 Drivers and Utilities can be downloaded from our web site, or call our Technical Support Department to request a Software Developer's Toolkit (CD-ROM).

POSjet Image Converter Utility

POSjet Image Converter (PJColorII) is a tool to help develop graphic images to use as logos and coupons on the printer. It will read and convert images to a format suitable for printing on the POSjet® 1500 printer. It will allow you to preview the image and adjust the colors prior to printing. It will also allow the images to be stored in the printer's User Store.

PJTerminal Utility

PJTerminal is a tool that has been developed to allow you to interactively send commands to and get responses from the printer.

Optional Printer Configurations

Color Configuration

All POSjet® 1500 ink cartridge configurations are factory installed options.

Single Color

The single color configuration is provided with a single ink cartridge. It cannot be upgraded for two-color operation.

Two-Color Ready

The two color ready configuration is equipped with a single ink cartridge but can be easily upgraded to two-color operation simply by installing a second ink cartridge.

Two-Color

Two-color configuration requires that two cartridges be installed in the carriage. If one of the cartridges is black, it must be installed in the left carriage position.

Supported Emulations

IPCL Codes

EPOS Emulation

Citizen Emulation

Ithaca® Microline Emulation

Physical Printer Specifications

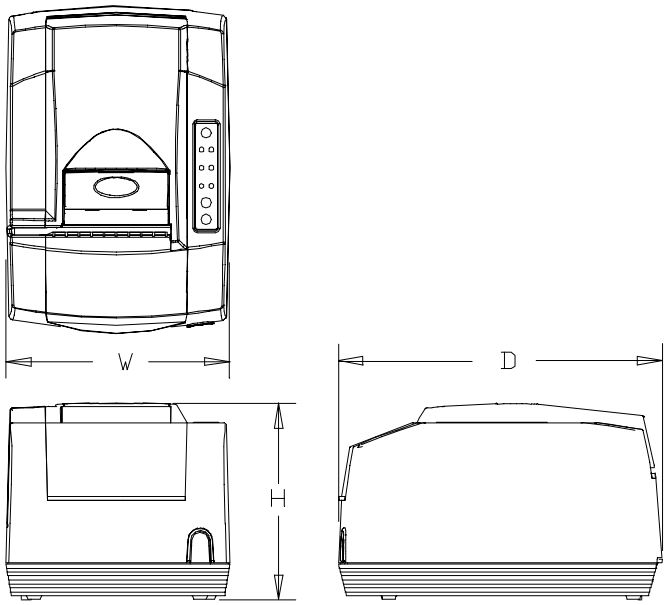

Figure 26 Printer Dimensions

	Width	Depth	Height
Without Knife	6.75" (172 mm)	9.75" (248 mm)	5.92" (151 mm)
With Knife	6.75" (172 mm)	9.75" (248 mm)	6.44" (164 mm)

Weight:	approx. 6 lbs. (2.7 kg)
Shipping:	approx. 8 lbs. (3.6 kg)

Interface

Serial RS-232C	Bi-directional- Ready/Busy or XON/XOFF (9-pin D-shell or 25-pin D-shell)
Parallel IEEE1284	Bi-directional-transmit/receive/ground (25-pin D-shell or 36-pin Centronics)
USB	Version 1.1

Auto-cutter (Partial Cut Option)

A receipt auto-cutter is an optional feature with all POSjet® 1500 Printers.

Cutter type	Guillotine
Cut to line of print	1.635" (41.52 mm)
Cutter life	1,000,000 cuts
Roll paper core outside Dia.	0.82" - 0.85" (20.8 – 21.6 mm) Dia.
Roll paper core inside Dia.	0.45" - 0.50" (11.4 – 12.7 mm) Dia.
Roll footage	330 feet (100 m)

Auto-cutter Position

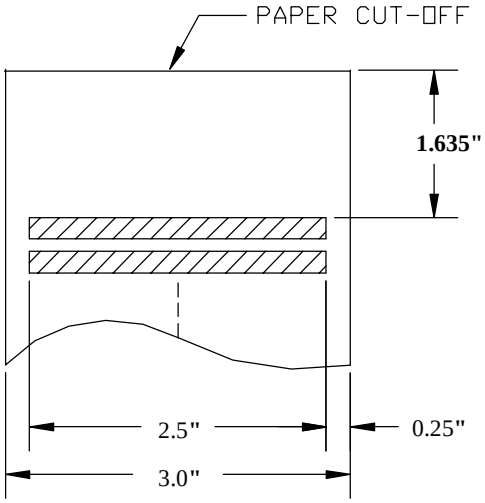

Figure 27 Receipt Printable Area

Sensors

Paper low indicator	Optional Paper Low Sensor (based on paper roll diameter).
Receipt paper out	About 1.0" (25 mm) of paper remaining
Paper feed method	Friction feed

Paper Out

A receipt paper out sensor is provided as a standard feature. It senses when there is approximately one inch of paper left on the paper roll.

Paper Low

A receipt paper-low sensor is provided as an optional feature. An operator-adjustable paper-low assembly allows the printer to sense when the paper roll is between 1.42" and 0.885" (36.1mm and 22.5mm) in diameter. It is adjustable to compensate for various paper core dimensions.

Environmental Conditions

The POSjet® 1500 is designed to be placed on point-of-sale terminals, counter tops, or any other flat, stable surface that can support the weight of the printer (about 6 lbs. or 2.7 kg). Be aware that the environmental conditions of the location where you place the printer will have an effect on the printer's performance and longevity. The printer will run its best when stored and operated in an environment that meets the following temperature and humidity conditions.

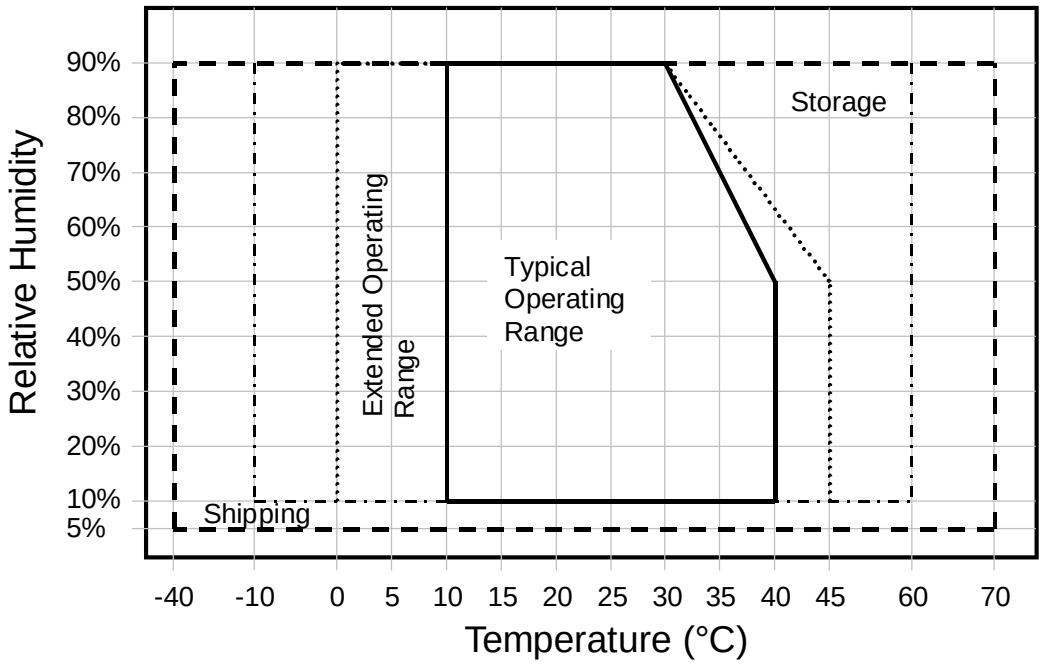

Figure 28 Environmental Conditions:Typical Operating Range

Typical Operating Range:	10°C to 40°C / 50°F to 104°F
***Extended Operating Range:**	0°C to 45°C / 32°F to 113°F+
Storage:	-10°C to 60°C / 14°F to 140°F
Shipping:	-40°C to 70°C / -40°F to 158°F

* Exposure to high or low temperatures for periods of greater than 48 hours will lead to significantly reduced cartridge life. The Typical Operating Range provides full printer reliability. The Extended Operating Range may degrade the reliability of the printer and life of the cartridge.

Relative Humidity

Operating:	10% to 90% RH *(non-condensing)*
Storage:	10% to 90% RH *(non-condensing)*
Shipping:	5% to 90% RH *(non-condensing)*

Accoustic Noise

58 db average (sound pressure level) while printing.

Reliability

Printer Life	10,000,000 print lines
Mean time between failures: (without cartridge):	28,000 hours
Average cartridge life (Average 16 dots/character):	7.0 million characters
Autocutter option (partial cut) :	1 million cuts
Mean time to repair:	15 minutes
Validation Cycles:	1 million cycles

Power and Communication Specifications

Power Requirements

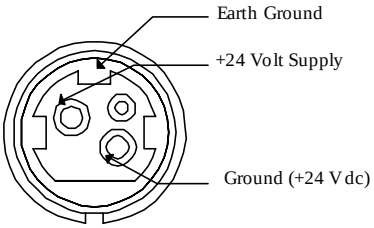

DC Powered Versions

Supply voltage: 24 Vdc ± 10%
Supply Current: 1.0Amps

AC Powered Versions

Supply Voltage: 100-240 Vac
Frequency: 50/60 Hz
Supply Current: .5 Amps maximum

Parallel Interface

There are two parallel interface cards available. One is a 25-pin, D-shell connector. The pin-out is such that the printer interfaces to a standard IBM PC parallel printer interface with a one-to-one cable. The second interface card provides the same interface with a standard, 36-pin Centronics type connector. Both cards provide a dual cash drawer interface. The tables below lists interface signals and pin definitions for both types of parallel interfaces.

25-pin D-Shell **IEEE 1284-A**

36-pin Centronics **IEEE 1284-B**

Parallel Pin Assignments

25-pin Connector	36-pin Connector	Signal	Description	Direction
Pin 1	Pin 1	STROBE	Clock data to printer	Host to Printer
Pins 2-9	Pins 2-9	D0 - D7	Data	Host to Printer
Pin 10	Pin 10	ACK\	Printer accepted data	Printer to Host
Pin 11	Pin 11	BUSY	Printer busy	Printer to Host
Pin 12	Pin 12	PE	Paper Out/Status	Printer to Host
Pin 13	Pin 13	SLCT	Printer selected	Printer to Host
Pin 14	Pin 14	AUTOFD	Autofeed paper	Host to Printer
Pin 15	Pin 32	FAULT\	Printer error	Printer to Host
Pin 16	Pin 31	INIT\	Initialize printer	Host to Printer
Pin 17	Pin 36	SLIN	Select printer	Host to Printer
	Pin 17	FG	Frame ground	Printer to Host
-	Pin 18	+5V	Peripheral logic high	Printer to Host
Pins 18-25	Pins 16, 19-30	GND	Ground	

Table 12 Parallel Interface Pin-outs

Parallel Signal Voltage and Current levels

Signal Levels		
Voltage levels		0 V and +5 V (nominal)
Logic levels		
Logic one	Driver	+2.4 V to +5 V
	Receiver	+2.0 V to +5 V
Logic zero	Driver	0 V to +0.4 V
	Receiver	0 V to +0.8 V

Current requirements		
Logic one	Source	0.25 ma at +2.4 V
Logic zero	Sink	16 ma

Line termination	
Data and control	3.3k ohm to +5 V
Strobe	1.2k ohm to +5 V

RS-232 Serial Interface

There are two Serial interface cards available. One is a 9-pin, D-shell connector. The pin-out is such that the printer interfaces to a standard IBM PC Serial printer interface with a Serial Null Modem cable. The second Interface card provides the same interface with a standard 25-pin D-shell connector. Both interface cards provide a dual cash drawer interface. The tables below lists interface signals and pin definitions for both types of serial interfaces.

Serial Port Features

Baud Rates	300, 600, 1200, 2400, 4800, 9600, 19.2K, 38.4K, and 57.6K
Bit Patterns	8-bit no parity; 8-bit odd; 8-bit even; 7-bit no parity; 7-bit odd; 7-bit even
Flow Control	DTR and XON/XOFF

Serial Pin Assignments

9-pin	25-pin	Signal	Description
Pin 1	Pin 8	N/C	No Connection
Pin 2	Pin 3	RX	Receive Data
Pin 3	Pin 2	TX	Transmit Data
Pin 4	Pin 20	DTR	Data Terminal Ready
Pin 5	Pin 7	GND	Signal Ground
Pin 6	Pin 6	DSR	Data Set Ready
Pin 7	Pin 4	RTS	Request to Send
Pin 8	Pin 5	CTS	Clear to Send
Pin 9	Pin 11	N/C	No Connection

Table 13 Serial Interface Pin Assignments

RS-232 Serial Interface Signal Voltage and Current levels

Voltage Levels	Max	+-15 Volts
	Min	+- 3 Volts

Mark = Off = -3 to –15 Volts
Space = On = +3 to +15 Volts

Because both the host and printer are DTE's (Data Terminal Equipment), they use the same serial port pin-outs. If the cable that is used to connect the host to the printer is a pin-to-pin inter-connect, it will not work. Therefore, a null modem or turn-around cable must be used to interconnect the host and the printer.

Display Pass Through

The display pass through feature allows a pole display to be interconnected with the printer. The printer is connected to a host system with a special serial cable. The host sends serial data to the printer and the printer sends serial data to the pole display. The printer does not provide power to the display. During normal printer operation, no data is passed to the display. In pass through mode, all received data is passed on to the display.

USB Interface

The USB interface is a Version 1.1 interface that is Version 2.0 compliant. The standard USB interface card is implemented through a Standard Series "B" Receptacle as defined in the USB Specification. The printer is self-powered and does not draw power from the standard type B USB interface cable.

The Standard USB Type B connector has the following pin functions:

Pin Signal

1 Vbus (+5 V dc) (Not used in the POSjet® 1500)
2 Minus data
3 Plus data
4 Ground

Note: The standard USB interface does not have enough power to run the printer.

Cash Drawer Interface Description and Specifics

The POSjet® 1500 Printer supports dual cash drawers with status. The driver in the printer is capable of supplying 24 Vdc at up to 1.5 amps for 250 milliseconds. The POSjet® 1500 Printer defines cash drawer closed as switch open. If the drawer is disconnected, the printer considers it closed. Since the printer does not act on the cash drawer status, the application can interpret cash drawer status any way it wants.

Connector Type (standard)	Single RJ12 connector with 24V sink drivers
Voltage	24 volts (Refer to power supply specification)
Current	1 amp maximum with current limit
Pulse Duration	250 msec maximum
Drawer Status	Open/close drawer status to printer

Pin Number	Ithaca®		Epson		Star	
	Signal Name **pin 1** CD2- **pin 2** CD1 Sense **pin 3** Ground **pin 4** CD Drive +(+24V) **pin 5** CD1- **pin 6** Not Connected	**Direction**	**Signal Name** **pin 1** No Connect **pin 2** CD1- **pin 3** CD Drive + (+24V) **pin 4** CD Drive + (+24V) **pin 5** CD2- **pin 6** CD1 Sense	**Direction**	**Signal Name** **pin 1** No Connect **pin 2** CD1- **pin 3** CD1 Sense **pin 4** CD Drive +(+24V) **pin 5** CD2- **pin 6** Ground	**Direction**
1	Drawer kick out Drive Signal 2	Output sink Drive	Not Connected		Not Connected	
2	Drawer open/close Signal	Input	Drawer kick out Drive Signal 1	Output Sink Drive	Drawer kick out Drive Signal 1	Output Sink Drive
3	Signal Ground		Drawer open/close Signal	Input	+24V DC	
4	+24V DC		+24V DC		+24V DC	
5	Drawer kick-out Drive Signal 1	Output Sink Drive	Drawer kick out Drive Signal 2	Output Sink Drive	Drawer kick out Drive Signal 2	Output Sink Drive
6	Not Connected		Signal Ground		Drawer open/close Signal	Input

Table 14 Cash Drawer Connectors

The printer can be configured for one of three cash drawer configurations. The interface card has a 14-pin header with a 10-pin shunt installed on it. The shunt position defines the configuration of the cash drawer. Refer to the markups on the board when determining where the shunt should be installed to work in the three different configurations.

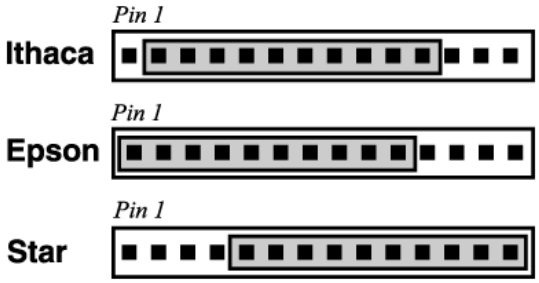

Figure 29 Cash Drawer Pin Assignments

Printing Specifications

Printing method:	Thermal ink jet
Cartridge arrangement:	12 nozzle
Print dot diameter:	0.012" (0.34 mm)
Print dot pitch:	0.0096" (0.244 mm)
Printing directions:	Bi-directional, logic seeking
Paper feed pitch:	Default - 0.125" (1/8" or 3.175 mm)
Validation Type:	Independent
# Validation lines:	Max. 9 lines (1.53")
Receipt print zone (maximum):	2.5" (63.5 mm)
Validation print zone:	Refer to "Validation Form Requirements" on pg. 109.

Characters per Line	Minimum Lines per Second[4]
10	12
20	10
30	8
40	6

Table 15 Print Speed Specifications

Print Pitch Capability *(Characters per Inch)*				Max Characters/Line *(2.5-inch Print Zone)*			Approximate Characters per Second[5]
Font	**Half Wide (Max CPI)**	**Single-wide (Max CPI)**	**Double-wide**	**Max**	**Typ**	**Dbl-wide**	
NLQ	Not Available	13.0	6.5	32	32	16	100
Large Draft	29.72	14.86	7.43	74	37	18	315
Small Draft	29.72	17.3	8.67	74	43	21	360

Table 16 Character Specifications

Characters per Line	Minimum Lines per Second[6]
10	12
20	10
30	8
40	6

Table 17 Print Speed Specifications

4 Print speed is calculated with the 12 x 12 single wide font at 17.3 cpi and 8 lpi spacing. If head maintenance needs to be done, the print speed will be less.

5 The value is based on a single full 2.5" print line printing single width, small draft font. Line feed time is not included.

6 Print speed is calculated with the 12 x 12 single wide font at 17.3 cpi and 8 lpi spacing. If head maintenance needs to be done, the print speed will be less.

Character Pitch

Each character has at least one, half-column, inter-character spacing included within the cell size. The inter-character spacing provides the maximum character pitch as shown in the table below. Change the spacing between characters in one of two ways. The first is to request that right side spacing be added between characters; the other is to request a specific pitch in characters per inch. When a specific character per inch (cpi) is selected, the printer calculates the number of half dot columns that must be inserted or removed between characters to print at the requested cpi. If the single width characters will overlap excessively, the printer will switch to half width characters. It is not always possible to print at exactly the requested pitch. The printer selects the closest possible pitch to the one chosen.

Requested CPI	Result	Font Format		
		NLQ 24 x 16 Font	Small Draft 12 x 12 Font	Large Draft 12 x 14 Font
1	1.000 CPI	Std Font	Std Font	Std Font
2	2.000 CPI	Std Font	Std Font	Std Font
3	3.014 CPI	Std Font	Std Font	Std Font
4	4.000 CPI	Std Font	Std Font	Std Font
5	4.952 CPI	Std Font	Std Font	Std Font
6	5.943 CPI	Std Font	Std Font	Std Font
7	6.933 CPI	Std Font	Std Font	Std Font
8	8.000 CPI	Std Font	Std Font	Std Font
9	9.043 CPI	Std Font	Std Font	Std Font
10	9.905 CPI	Std Font	Std Font	Std Font
11	10.947 CPI	Std Font	Std Font	Std Font
12	12.235 CPI	Std Font	Std Font	Std Font
13	13.000 CPI	Std Font	Std Font	Std Font
14	13.867 CPI	Std Font	Std Font	Std Font
15	14.857 CPI	Std Font	Std Font	Std Font
16	16.000 CPI	Std Font	Std Font	Std Font
17	17.333 CPI	Not recommended	Std Font	Std Font
18	17.333 CPI	Not recommended	Std Font	Std Font
19	18.909 CPI	Not recommended	Std Font	Half Width
20	20.8 CPI	Not recommended	Half Width	Half Width
21	20.8 CPI	Not recommended	Half Width	Half Width
22	23.111 CPI	Not recommended	Half Width	Half Width
23	23.111 CPI	Not recommended	Half Width	Half Width
24	23.111 CPI	Not recommended	Half Width	Half Width
25	23.111 CPI	Not recommended	Half Width	Half Width
26	26.000 CPI	Not recommended	Half Width	Half Width
27	26.000 CPI	Not recommended	Half Width	Half Width
28	26.000 CPI	Not recommended	Half Width	Half Width
29	29.714 CPI	Not recommended	Half Width	Half Width
30	29.714 CPI	Not recommended	Half Width	Half Width
31	29.714 CPI	Not recommended	Half Width	Half Width

Table 18 Possible Character Pitches

Standard Print

The three resident fonts in the printer are Draft, Large Draft, and Near Letter Quality (NLQ). The cell size for each is different. In addition, the Small and Large draft fonts can be printed in Double, Single and Half wide versions. All the width variations are based on the single width and use mathematical algorithms to convert them to different widths. The following discussion is based on the basic single width character.

Character Cell	Draft	Large Draft	NLQ
Horizontal	12	14	16
Vertical	12	12	24

Table 19 Basic Cell Size for Draft, Large Draft, and NLQ Fonts

Draft Font

The draft font is defined in the 12 x 12 cell to use 6 full-columns and 5 half-columns horizontally. In general, most characters are only nine dots wide; however, to provide readable international characters, the minimum cell size is kept at 12. The minimum cell size provides at least 1 half-column between any character.

The vertical format never uses the top dot, and the bottom 2 dots are used for character decenders and underline. The draft font provides the most print per line and the most efficient use of ink per character.

```
01      ............
02      ....0.0.....
03      ...0...0....
04      ..0.....0...
05      .0.......0..
06      .0.0.0.0.0..
07      .0.......0..
08      .0.......0..
09      .0.......0..
10      .0.......0..
11      ............
12      ............
```

Figure 30 Draft 12 x 12 Font

Large Draft Font

The large draft font is defined in the 12 x 14 cell to use 7 full, and 6 half-columns horizontally, which provides at least 1 half-column between any character.

The vertical format uses the first 10 rows for the characters and the bottom 2 for character decenders and underline. The large draft font is larger than the draft font and is more readable. It, however, provides fewer characters per line and uses more ink per character.

```
01      .....0.0......
02      ....0...0.....
03      ....0...0.....
04      ...0.....0....
05      ..0.......0...
06      ..0.......0...
07      .0.0.0.0.0.0..
08      .0.........0..
09      0...........0.
10      0...........0.
11      ..............
12      ..............
```

Figure 31 Large 12 x 14 Font

Near Letter Quality (NLQ) Font

The near letter quality font is defined in the 24 x 16 cell that is printed in 2 passes. Horizontally, 15 dots are typically used, providing at least 1 half-column between any two characters.

The vertical format uses rows 4 - 19 for the basic character, rows 1 - 3 for accents, and rows 20 - 24 for decenders and underlines. Because NLQ font makes two passes, the vertical size is slightly larger than large draft font. Vertical resolution is doubled.

NLQ font is easily readable and has a higher contrast than the draft or large draft fonts. It, however, provides fewer characters per line and uses more ink per character than either draft font.

```
01      ................
02      ................
03      ................
04      .......0........
05      .......0........
06      ......0.0.......
07      .....0...0......
08      .....0...0......
09      ....0.....0.....
10      ....0.....0.....
11      ....0.....0.....
12      ...0.......0....
13      ...0.......0....
14      ..00000000000...
15      ..0........0...
16      ..0........0...
17      .0..........0..
18      .0..........0..
19      0000.......0000.
20      ................
21      ................
22      ................
23      ................
24      ................
```

Figure 32 NLQ 24 x 16 Font

In non-Ithaca® emulation modes, only the draft and large draft fonts are available. They provide a close approximation to the Epson 9 x 9 and 7 x 9 formats available in the TM-U200 model printer.

Rotated Print

To provide printing flexibility, rotated print is available. Rotated print mode rotates the print in any of three 90° orientations. In 90° and 270° rotated mode, the print data is first buffered by the printer, processed (rotated), and then printed. Buffering the data delays the print process as it takes some time to process the data before it is printed. In 180° mode, the print is simply inverted. Rotated print is not available for NLQ font or when the printer is in Epson mode.

Graphics Generation

The POSjet® 1500 supports both APA graphics and Color Raster graphics (Horizontal graphics). In APA graphics mode the following print resolutions are supported.

Mode	Horizontal	Vertical	Data
APA graphics NOTE: Not all resolutions are available in all emulations.	60 dpi *	96	8-bit slices
	120 dpi *	96	8-bit slices
	120 dpi *	192	8-bit slices
	240 dpi *	192	8-bit slices
	80 dpi *	96	8-bit slices
	72 dpi *	96	8-bit slices
	90 dpi *	96	8-bit slices
	144 dpi *	96	8-bit slices
	160 dpi *	96	8-bit slices
	104 dpi	120	24-bit slices
	208 dpi	240	24-bit slices
Horizontal graphics	104 dpi	96 dpi	1 horizontal 1 vertical pass
	208 dpi	96 dpi	2 horizontal 1 vertical pass
	104 dpi	192 dpi	1 horizontal 2 vertical passes
	208 dpi	192 dpi	2 horizontal 2 vertical passes

❖ These horizontal resolutions are converted by scaling in the printer. They are printed in 104 or 208 dpi resolution. Color graphics are supported in Horizontal graphics mode only.

Media Specifications

Media Specifications

Hewlett-Packard Inkjet Cartridges

Print Cartridge Specification	HP C6602A[7]
Cartridge arrangement	**12 vertical nozzles**
Vertical dot pitch	0.264 mm (0.0104") or 96dpi.
Cartridge life	~7.0 M Characters @ 16 dots per Character.
Cartridge Colors	**Black, Red, Blue, Green**

Ink Cartridge Operating Conditions (maximum ratings)

Parameter	Minimum	Maximum	Units	Conditions
Shelf Life [1]		24	Months	At 73°F in shipping package
Out of Package Life [1] (Installed in Printer)		6	Months	At 73°F outside shipping package

Table 20 Ink Cartridge Maximum Operating Conditions

Note 1: Total life is Shelf Life (from date of manufacture) plus Out of Package Life.

Note 2: Exposure to high and low temperatures, or long exposure times near specification limits, significantly reduce cartridge life. Higher character capacities are achieved by reducing font resolution.

Receipt Paper (one-ply receipt)

Paper width:	3.0" ± .02" (76mm ± .5mm)
Paper roll diameter:	4.0" max (101.6mm max)
Paper thickness:	.003" - .004" (.07mm - .1mm)
Roll paper core outside Dia.	0.82" - 0.85" (20.8 – 21.6 mm) Dia.
Roll paper core inside Dia.	0.45" - 0.50" (11.4 – 12.7 mm) Dia.
Roll footage	330 feet (100 m)

Paper and Core Diameter

To insure proper paper low detection, use paper rolls and paper that meet the specifications above. Adjustment and operational results may vary if other thickness and width dimensions are used.

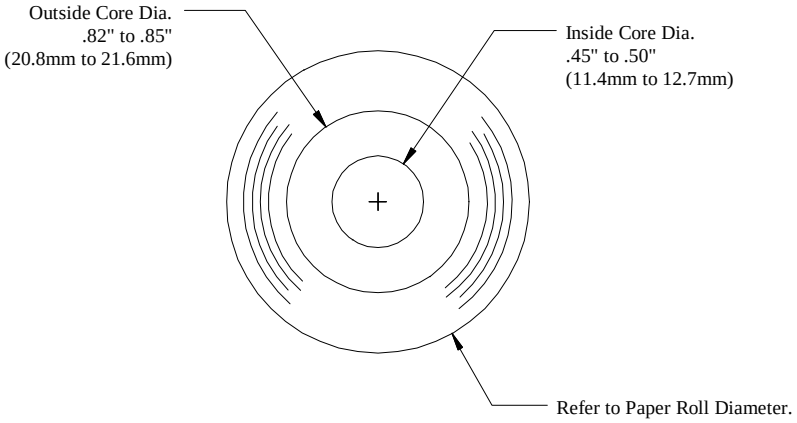

[7] Print Cartridge Specifications are controlled by Hewlett-Packard and are proprietary. Information here is for reference only.

Figure 33 Paper Roll and Paper Core Diameters

Validation Form Requirements

Form thickness-single part:	.003" to .0047" (.076 mm. to .119 mm.)
Form Size (Min):	2.75" high x 2.75" long (69.8 mm. x 69.8 mm.)
Form Size (Max):	8.5" high x 11" long (215.9 mm. x 279.4 mm.)
# Validation lines:	Max. 9 lines (1.53")
Check Basis weight:	24 lbs.

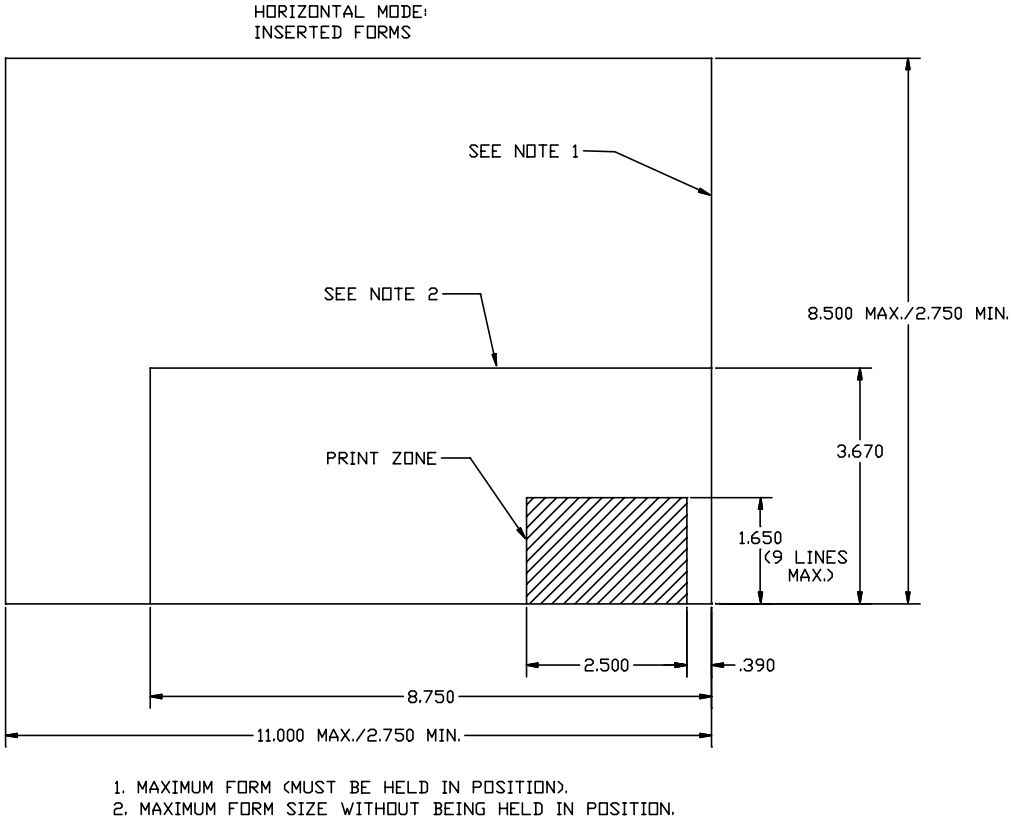

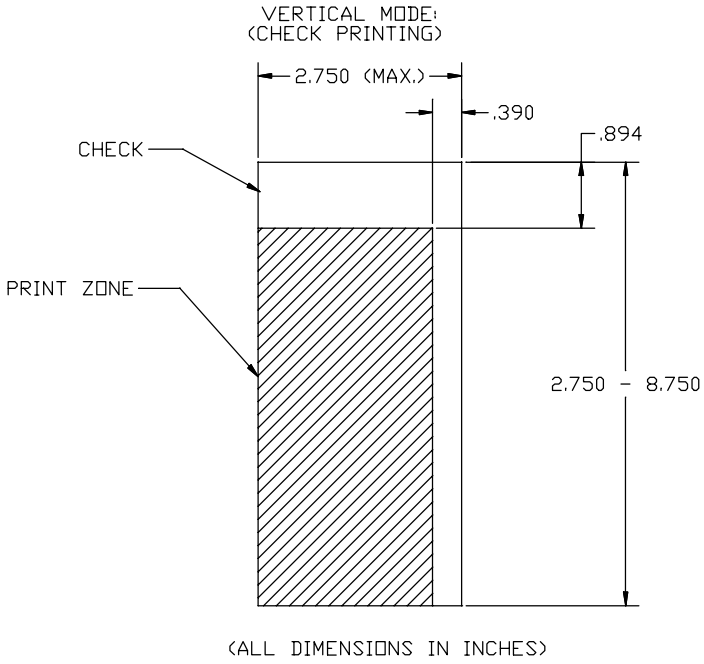

Figure 34 Form Print Zones

Electrical Specifications

External Powered AC

The POSjet® 1500 Printer is designed to be AC self-powered in domestic and international markets. The printer is equipped with a detachable universal input power supply that is designed to operate worldwide without modification.

Supply Voltage Rating (VAC)	Supply Voltage Range (VAC)	Frequency (Hz)	Rated Power (watts)	Idle Current (amps)	Printing Current (amps)
100-240	90-264	47 - 63	25	0.08 @ 120VAC 0.04 @ 240VAC	.435 @ 100 VAC .281 @ 240 VAC

Table 21 Standard Power Input Requirements

External Powered DC

Optionally, the POSjet® 1500 Printer can be operated with an external 24-volt DC power supply.

Supply Voltage Rating (VDC)	Supply Voltage Range (VDC)	Frequency (Hz)	Power (watts)	Idle Current (amps)	Current (amps)
24-5+10%	22.8 - 26.4[8]	DC	25W Avg. (Printing)	0.125	2.0 (Cash Drawer Fire) 1.0 (Printing)

Table 22 Power Input Requirements Optional 24-volt DC Supplied from Host

Cash Drawer

Interface Description

The POSjet® 1500 Printer supports dual cash drawers with status. The driver in the printer is capable of supplying 24 V DC at up to 1.5 amps and 250 milliseconds. The POSjet® 1500 Printer defines cash drawer closed as switch open. If the drawer is disconnected, the printer considers it closed. Since the printer does not act on the cash drawer status, the application can interpret cash drawer status any way it wants.

- **Driver connector type (standard)** Single RJ12 connector (6 pin) with 24V sink drivers
- **Driver voltage** 24 volts (Refer to power supply specification)
- **Driver current** 1 amp maximum with current limit
- **Pulse duration** 250 msec maximum
- **Drawer status** Open/close drawer status provided to printer

The cash drawer interface can be configured for one of three configurations. The Communications Interface card Board has a 14-pin header with a 10-pin shunt installed on it. The shunt position defines the configuration of the Cash Drawer. There are three settings, Ithaca®, Epson, and Star.

[8] For DC powered printers, the cash drawer is supplied directly from the DC input supply. The cash drawer requirements may effect the allowable range of voltages.

Section 8: Troubleshooting

Indicator Lights (LED)

The five POSjet® indicator lights are:

- Power LED — Indicates printer activity and non-recoverable errors
- Error LED — Indicates problems and probability of recovery
- Paper LED — Indicates paper status (paper low)
- Left Cartridge LED — Indicates ink levels of left cartridge
- Right Cartridge LED — Indicates ink levels of right ink cartridge

Power Indicator (LED)

The power indicator lets the user know that the printer is ON. If the POWER indicator blinks in conjunction with the ERROR indicator, the printer is experiencing a non-recoverable error. See the fault indicators below. If the POWER indicator blinks, and there is no ERROR indicator blinking, the printer is being held in reset by the host.

Error Indicator (LED)

The ERROR indicator lets the user know that the printer is experiencing a problem. If the POWER indicator is lit (not blinking), the error is generally recoverable without data loss. If the POWER indicator is blinking, a non-recoverable error has occurred. See fault indicators below. If the error is not operator recoverable, a power cycle may correct the problem. If a power cycle does not correct the fault, the printer must be serviced.

Paper Indicator (LED)

The PAPER indicator signals the paper status. If the printer is equipped with a paper low option, the PAPER indicator will blink when the paper is low. The low sensor is adjustable, and the amount of paper remaining is dependent on the adjustment. If the PAPER indicator is lit with the ERROR indicator, the printer is out of paper. The printer stops printing and waits for the paper to be changed.

Cartridge Indicators (LED–left and right)

The printer has two ink cartridge indicators that signal the ink cartridge status. The right indicator is for the right cartridge and the left indicator for the left cartridge. If the printer is a single color printer, the left cartridge indicator is used. In most cases, the left cartridge is black, and the right is a highlight color.

Cartridge is low on ink	(1 Blink, pause)	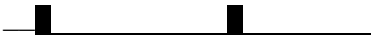
Cartridge has been removed	(Blinking, error)	

Note 1 If both heads are low, the NEW CARTRIDGE button only needs to be pressed once; however, both heads must be changed.

Fault Indicators

The error indicator is the primary fault indicator. It is always on or blinking if a fault has occurred.

Three types of faults exist

- **Fully-recoverable faults** — Paper out or cover open
- **Semi-recoverable faults** — Head Jam
- **Non-recoverable faults** — Component failure

Fully-recoverable and Status

A fully-recoverable error will restart printing exactly where it stopped when the error occurred. Printing will resume after error has been properly addressed. A *status recoverable* error is very similar to a *fully-recoverable* error. Additionally, status is used to display when the printer consumables may need replacing.

Semi-recoverable

A semi-recoverable error is determined by whether or not the printer has to be shut off and turned back on while attending to the problem. The amount of information lost is dependent on the type of error and the state of the information being processed.

Non-recoverable

A non-recoverable error produces information loss.

If during normal operation, the ERROR indicator is lit and the POWER indicator is blinking, a minor error occurred. The POWER indicator shows the error by blinking a pattern. Pressing the * Button restarts the printer. Blink patterns are defined as follows.[9]

1 Blink (1 blink, pause)

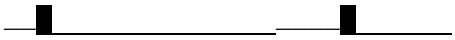

2 Blink (2 blinks, pause)

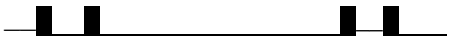

3 Blink (3 blinks pause)

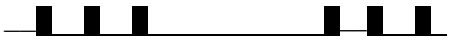

[9] The blink rate is effected by the data received. The faster the data, the faster the printer blinks.

Recovery from Mechanical Errors

The Ithaca Inquire commands and the Epson [DLE][ENQ] and [DLE][EOT] commands allow most printer error status to be read and in some cases recovery attempted. Paper jams and auto-cutter faults can be recovered, however, any data not previously printed will be lost.

If the application is to support Error Recovery, the application should use the appropriate status request commands to query the printer periodically. If an error response is such that the fault is recoverable, the host application should interact with the operator and request that the fault be corrected. (IE. Clear Paper Jam) When the operator indicates that the problem has been corrected, the host can issue a reset request.

If a serious error occurs, the printer will halt and enter fault error mode. If the fault is such that the printer can maintain communications with the host, the print status request and response system will remain active. The status of the system will however remain static. That is the status responses will reflect the state of the system when the fault occurred.

Non-Reportable Error

Some errors cannot be reported to the host system. These errors are such that the integrity of the printer do not allow continued operation. That is there is no way to report the error. These errors occur (for the most part) during power up diagnostics. They are as follows:

EEPROM READ ERROR **Power up only**
The Internal EEPROM is not readable or the check sum is bad. Pressing the Power Button will attempt to rewrite the configuration information. This may leave the printer configured incorrectly.

EEPROM WRITE ERROR **Power up/down and Configuration only**
The Internal EEPROM is defective. There is no recovery.

SOFTWARE ERROR VECTOR **Can occur at any time.**
These errors can occur during operation. They signal a serious problem with the system. In most cases this error will also generate a Watch Dog reset. A power cycle will generally recover normal printer operation. An ESD event or a firmware bug generally causes these errors. The printer maintains an error log, this log contains additional information about the fault and is printed during manual configuration. The information in this log should be reported to Transact to identify the exact cause of the fault.

USERSTORE FORMAT ERROR **Power up or User Store Write Operations**
The User Store data in FLASH has an invalid format. Pressing the Power Button will erase the user store and reformat it. This can be caused by a firmware update.

FLASH WRITE ERROR **Power up or User Store Write Operation.**
The Program Flash has failed. There is no recovery from this error.

COM ADAPTER ERROR **Power up only**
The communications interface card is either not supported by the firmware, or is missing. There is no recovery.

Programmer's Notes

When the serial port is used, it is important that the output lines from the printer not be shorted or back driven. If the signals are not to be used, they should be left open. Pins 3, 4, and 7 (of the 9 pin connector) are outputs from the printer. If any one of these signals is grounded or back driven, the other two outputs will be degraded. The best time to configure the printer by the host with remote configuration is during system setup or software update.

Startup Troubleshooting

This troubleshooting section provides solutions to problems that may occur with your printer during installation.

Printer Does Not Turn ON	
Possible Cause	**Remedy**
Printer is OFF	**Press** and **release** the * Button
No Power	Confirm that power is available, and that the power cord is fully seated in the power supply's power socket.
No DC Power	Check the connection of the power supply output cable to the Interface Card.
Defective Interface Card	Check the printer's Interface Card for damage. Replace if needed.
Printer Will Not Communicate (prints illegible receipts)	
Possible Cause	**Remedy**
Incorrect Cable Configuration	Turn printer OFF and reconnect communication cables.
Incorrect Printer Configuration	**Compare configuration settings with application requirements.** Use Self-Test to print out the printer's configuration settings, or compare to the configuration receipt that shipped with your printer. **Most Frequent Configuration Incompatibilities** *Parallel Printer* Emulation Carriage Return Options *Serial Printer* Emulation RS-232 Serial Interface (baud rate) Carriage Return Options *Knife Option* The Knife option is not automatically detected by the printer at initial power on. It must be enabled using the printer's configuration mode. Be sure that the knife option is selected in configuration mode. *Dual Color Option* The Dual Color option is not automatically detected by the printer at initial power on. It must be enabled in configuration mode. If the printer is configured for dual color and operation is attempted without the second pen installed, the printer will generate an Error Fault. To avoid this Fault, the option must be disabled. A Dual cartridge printer can be operated with only the left cartridge installed if the Color configuration is set to Black Only.
Incorrect Cash Drawer Settings	Confirm that the sticker on the bottom of your printer matches the application system requirements. The setting should be one of three: Ithaca, Epson, Star. See "Connecting the Cash Drawer", on page 11.
Defective Interface Card	Check the Interface Card for damage. Replace if needed.
Ink Cartridge Status Indicator Flashing/ Printer will not Operate	
Possible Cause	**Remedy**
Cartridges(s) Not Installed	Ensure that the ink cartridge(s) are properly installed and the blue latch(es) are closed properly. If the printer is configured for two cartridges, both must be present. See "Installing Ink Cartridges", on page 16.
Poor Cartridge Installation	Remove ink cartridge(s) and re-install. Make sure the blue latches are closed properly. See "Installing Ink Cartridges", on page 16.

Table 23 StartupTroubleshooting Help

Operational Troubleshooting

Understanding Fault Indicators

The ERROR INDICATOR LIGHT is the primary fault indicator. It is always On or Blinking if a fault has occurred.

Three types of faults exist

Fully-recoverable faults	Paper out or cover open
Semi-recoverable faults	Head Jam
Non-recoverable faults	Component failure

Fully-recoverable and Status

A fully-recoverable error will restart printing exactly where it stopped when the error occurred. Printing will resume after error has been properly addressed.

Semi-recoverable

A semi-recoverable error requires that the printer be reset or power cycled after the cause of the error is corrected The amount of information lost is dependent on the type of error and the state of the information being processed.

Non-recoverable

A non-recoverable error produces information loss and may require a service call.

Indicator Light Blink Patterns

If during normal operation, the ERROR indicator is lit and the POWER indicator is blinking, a minor error occurred. The POWER indicator shows the error by blinking a pattern. Pressing the * Button restarts the printer. Blink patterns are defined as follows.[10]

1 Blink	(1 blink, pause)	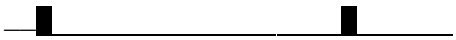
2 Blink	(2 blinks, pause)	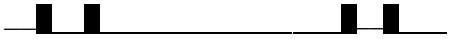
3 Blink	(3 blinks pause)	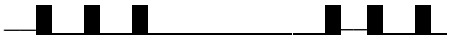

[10] The blink rate is effected by the data received. The faster the data, the faster the printer blinks.

Keypad Indicator Troubleshooting Chart: General Problems

General problems: Use this table to determine problem type					
Error Type	**Power LED**	**Error LED**	**Paper LED**	**Left Cartridge**	**Right Cartridge**
Cover Open	ON	ON	OFF	OFF	OFF
Out of Paper	ON	ON	ON	OFF	OFF
Paper Low	ON	OFF	**Blink**	OFF	OFF
Right Cartridge Low	ON	OFF	OFF	OFF	**1 Blink**
Left Cartridge Low	ON	OFF	OFF	**1 Blink**	OFF
Both Cartridges Low	ON	OFF	OFF	**1 Blink**	**1 Blink**
Left Cartridge Removed	ON	ON	OFF	ON	OFF
Right Cartridge Removed	ON	ON	OFF	OFF	ON

Table 24 Keypad Indicators: General Problems

The black colorings for each indicator light simulate either a solid or a blinking indicator light.

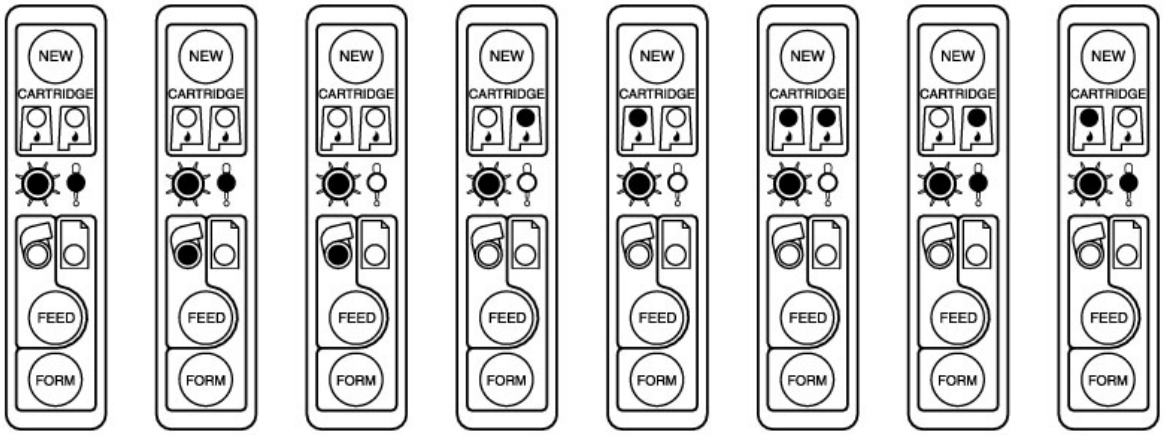

Cover Open | Out of Paper | Paper Low | Right Cartridge Low | Left Cartridge Low | Both Cartridges Low | Right Cartridge Removed | Left Cartridge Removed

Keypad Indicator Troubleshooting Chart: Serious Problems

The POSjet® will use a combination of the POWER and ERROR INDICATOR LIGHTS to signal serious problems. In most cases, you can tell if the printer is experiencing a specific type of serious problem by counting the number of times that the POWER INDICATOR LIGHT blinks. Most serious problems should be addressed by a TransAct technical support specialist. See “Contacting TransAct’s Ithaca Facility” on page v.

Serious problems: Contact Technical Support for assistance. (877) 7ITHACA or (607) 257-8901					
Error Type	**Power LED**	**Error LED**	**Paper LED**	**Left Cartridge**	**Right Cartridge**
Carriage Jam	**1 Blink**	ON	OFF	OFF	OFF
Configuration Error	**2 Blinks**	ON	OFF	OFF	OFF
Statistics Update Error	**3 Blinks**	ON	OFF	OFF	OFF
Internal Software Error	**4 Blinks**	ON	OFF	OFF	OFF
Knife Jam	**5 Blinks**	ON	OFF	OFF	OFF
User Store Defective	**6 Blinks**	ON	OFF	OFF	OFF

Flash Write Error	**7 Blinks**	ON	OFF	OFF	OFF

Table 25 Keypad Indicators: Serious Problems

Correcting Common Operating Problems

This troubleshooting section provides solutions to problems that may occur with your printer. Use the following series of tables to determine printing problems. It is highly recommended that you maintain a history of reported problems and the actions you took to identify or resolve problems. This information can help you isolate later problems and anticipate or avoid others. In particular, you should record the problem description, including a brief explanation of the symptoms. The following is a list of possible problem areas. These categories have been established to assist you with preliminary troubleshooting information.

- Keypad Lights Are Not Working
- Printer Will Not Print (ERROR INDICATOR LIGHT ON)
- Printer Will Not Print (ERROR INDICATOR LIGHT OFF)
- Printer Prints With Missing Dots In Characters
- Printer Sounds Like It's Printing But Nothing Prints
- Printer Will Not Load Or Feed Paper

Keypad Lights Are Not Working	
Possible Cause	**Remedy**
Poor Connections/No Power	Check to see if the power cord is plugged into wall outlet.
	Check the power cord connection on back of the printer.
	Check to see if printer is turned in OPERATIONAL/ON mode.

Table 26 Troubleshooting: Keypad Lights Will Not Work

Printer Will Not Print (Error light ON)	
Possible Cause	**Remedy**
Ink Cartridge Not Installed	Install new ink cartridge(s). See "Installing Ink Cartridges on page 16.
Paper Cover Open	Close the printer's front cover, making sure that the rear paper cover is snapped into place.
	Check the paper path for debris and/or jammed paper which might cause the covers not to close fully.
Paper Not Installed	Install a new paper roll. See "Installing a New Paper Roll Using Insta-Load™", on page 18.
Carriage Jammed	Open the printer's cover and clear any paper or debris from around the carriage.

Table 27 Troubleshooting: Printer Will Not Print (Error Light ON)

Printer Will Not Print (Error Light OFF)		
Possible Cause	**Remedy**	
Printer Is Not Responding To Any Input	Check Printer in Self-Test. See "Printer Self-Testing on page 34.	
	If Self-Test prints *Check communication cable connection, and verify the printer's communication configuration settings.*	***If Self-Test does not print*** Contact TransAct's Ithaca Facility. See "Contacting TransAct's Ithaca Facility", on page v.

Table 28 Troubleshooting: Printer Will Not Print (Error Light OFF)

Printer Prints With Missing Dots In Characters		
Possible Cause	**Remedy**	
Ink Buildup On Ink Cartridges	**Press the NEW CARTRIDGE Button 2-3 times and try to print again. The NEW CARTRIDGE Button cycles the printer's ink cartridge cleaning wipers.**	
	If the New Cartridge Button Works: *Resume printing and remember to use the * Button to place the printer into STANDBY/OFF mode while not in use.*	***If the New Cartridge Button Does Not Work:*** *Replace with a new ink cartridge. Dispose of the used ink cartridge. Resume printing.*

Table 29 Troubleshooting: Printer Prints With Missing Dots in Characters

Printer Sounds Like It's Printing But Nothing Prints		
Possible Cause	**Remedy**	
Paper Path Jammed	**Open printer's covers and check to see if there is any debris in the paper path that may cause paper not to feed correctly.**	
	If You See Debris: *Unplug the printer and clear any debris. Plug the printer back in. Press and hold the FEED Button to advance paper. Try printing again.*	***If There Is No Debris:*** *Press the NEW CARTRIDGE Button 2-3 times to cycle the printer's automatic cleaning mechanism. Try printing again. If the problem still exists, contact TransAct's Ithaca Facility.*
	Press the NEW CARTRIDGE Button 2-3 times and try to print again. The NEW CARTRIDGE Button cycles the printer's ink cartridge cleaning wipers.	
	If New Cartridge Button Works: *Resume printing and remember to use the * Button to place the printer into STANDBY/OFF mode while not in use.*	***If New Cartridge Button Does Not Work:*** *Replace with a new ink cartridge. Dispose of the used ink cartridge.*
	If the problem still exists, contact TransAct's Ithaca Facility. See Contacting TransAct's Ithaca Facility on page v.	

Table 30 Troubleshooting: Printer Sounds Like It's Printing But Nothing Prints

Printer Will Not Load Or Feed Paper		
Possible Cause	**Remedy**	
Covers Open	Close the printer's covers making sure that they are fully snapped into place.	
	Check the paper path for debris and/or jammed paper which might cause the covers not to fully close.	
Paper Path Jammed	**Open the printer's covers and check to see if there is any debris in the paper path that may cause paper not to feed correctly.**	
	If You See Any Debris: *Unplug the printer and clear any debris. Plug the printer back in and **press** and **hold** the FEED Button to advance paper.*	***If There Is No Debris:*** *Call TransAct's ithaca facility. See "*Contacting TransAct's Ithaca Facility*", on page v.*
Paper Not Installed Correctly	Remove all paper from the printer. Then, reload the paper roll, making sure that the leading edge of the paper does not extend past the molded paper stop mark on the front cover. Refer to"Installing a New Paper Roll Using Insta-Load™" on page 18.	

Table 31 Troubleshooting: Printer Will Not Load or Feed Paper

Section 9: Programming Controls

Control Codes Overview

This programmer's guide is designed to help users of the POSjet® 1500 printer develop applications. POSjet® 1500 Printers are specialized point-of-sale printers that have several features not normally found on general-purpose printers. Because of these special features, POSjet® 1500 Printers have unique control codes. This programmer's guide documents the control codes that are unique to the POSjet® 1500 Printer.

Nomenclature

When describing control codes, confusion often occurs as to whether the description is decimal, hexadecimal, or ASCII. To minimize the problem, this programmer's guide uses the following nomenclature when describing control code sequences.

[ ] Encloses a control character. [ ] represents a single, 8-bit value as defined in the standard ASCII tables. The ASCII Code Table in Appendix B lists the control codes. An example would be [ESC], which would represent a 1BH or 27 decimal.

< > Encloses an 8-bit value in decimal format. The value is from zero to 255. An example is <2>, which represents 02H or 2 decimal.

<n> Indicates a variable parameter. The variable parameter, <n>, can have a value from zero to 255. The meaning of <n> is described and defined in the description of the command.

<n_1> <n_2> Indicates that there are two parameters, <n_1> and <n_2>, where both can have values from zero to 255.

<m_1> <m_2> Is an Ithaca® Printer Control Language (IPCL) parameter consisting of two digits where <m_1> and <m_2> are ASCII characters from zero to nine. The parameter is combined to form a value from zero to 99. If <m_3> is included, the parameter is combined to be from zero to 999. If two values are specified, there must be two bytes added to the IPCL code. That is, if the command specifies <m_1> <m_2> and the desired value is five, it must be specified as 05.

x All other characters in control strings represent ASCII characters. For example, [ESC] 1 represents 1BH followed by 31H.

In many cases, applications require that control sequences be specified in hexadecimal or decimal codes. In most cases, commands are specified in ASCII, hexadecimal, and decimal. The ASCII Code Table in Appendix B (page 275) lists ASCII, hexadecimal, and decimal equivalents.

Standard Emulation

The standard control codes for the POSjet® 1500 printer are extensions and subsets of the PcOS IBM emulation provided on other Ithaca® products. In some cases, an application designed for a Series 50 Printer with IBM code sets will function with a POSjet® 1500 printer.

IPCL Codes

Ithaca® Printer Control Language (IPCL) codes are part of PcOS and designed to control a printer without using control characters (i.e. characters less than 20H). Only the standard PcOS emulation supports IPCL.

In rare cases, an IPCL code will interfere with the text that is to be printed. The IPCL translator can be disabled with an [ESC] y <4> command.

EPOS Emulation

ESC/POS[11] is referred to here as EPOS. The POSjet® 1500 printer supports two Epson emulations. One emulation is for the TM-U200, and the other is a general EPOS emulation that has extensions that do not match any Epson printer.

The TM-U200 emulation is designed to allow POSjet® 1500 printers to be used with applications that are designed for Seiko Epson TM-U200 printers.

The EPOS emulation is an extension of the TM-U200 emulation that removes some of the limitations imposed by the TM-U200 and allows fuller use of the POSjet® 1500 features.

It is intended that the standard Ithaca® PcOS emulation be used for new applications. Not all features of POSjet® 1500 Printers are supported by EPOS. Specifically, the ability to print color horizontal graphics is not supported.

Citizen 3500 Emulation[12]

The POSjet® 1500 Printer supports Citizen emulation modes.

Star Emulation[13]

The POSjet® 1500 Printer supports Star emulation modes.

Ithaca® Microline Emulation[14]

The POSjet® 1500 Printer supports several Microline emulations. These emulations allow the POSjet® 1500 Printer to replace some older M50 printers with Microline commands. This emulation is not documented here. Refer to our Microline Emulation Programmer's Guide (12-03244) for more information.

Application Development

To aid application development, several chapters in this manual are designed to help the programmer understand the POSjet® 1500 Printer. The next chapter provides a detailed description of each of the commands. Subsequent chapters provide explanations of how the printer works including a description of the internal print buffer, communications link, and interaction between the host computer and printer.

---

[11] ESC/POS is a registered trademark of the Seiko Epson Corporation.
[12] Not all versions of the POSjet® 1500 Printer support the Citizen Emulation.
[13] Not all versions of the POSjet® 1500 Printer support the Star Emulation.
[14] Not all versions of the POSjet® 1500 Printer support the Citizen Emulation.

Section 10: Ithaca Control Codes and Commands

Throughout this programmer's guide, charts and tables list commands and features. In most cases, the charts cross-reference the page that describes the command. Commands are grouped by function and may be difficult to find. To minimize the time it takes to find commands, code summary charts, arranged by code and function, are provided.

PcOS Printer Control Codes

The following section defines the Ithaca® PcOS emulation. The native, Ithaca® PcOS emulation provides the most flexibility and control over the printer. It is consistent with most previous Ithaca® PcOS products and should be used when the printer is placed into a new application.

The new feature in the POSjet® 1500 Printer is the ability to print color graphics. The control codes for color graphics are all new. Due to the complexity of color graphics, Ithaca® provides several drivers to integrate into your application. Ithaca® does not recommend that you generate drivers. In addition, Ithaca POSjet® has created several tools that can be used to generate and maintain graphic images and files for print on the POSjet® 1500. Information about drivers and tools are available on the TransAct web site and on a *POSjet® Software Developer's Toolkit*. For more information about either of these options, contact Technical Support.

Quick PcOS Reference Chart

Description	ASCII	Hex	IPCL equivalent code	Page
Low Level paper Motion				
Line feed.	[LF]	0AH	&%LF	129
Carriage return.	[CR]	0DH	&%CR	129
Horizontal Motion				
Back space.	[BS]	08H	&%BS	130
Horizontal tab.	[HT]	09H	&%HT	130
Set horizontal tab stops.	[ESC] D <n_1> <n_2> ... <n_i> <0>	1BH,44H	none	130
Set horizontal position.	[ESC] n <n_1> <n_2>	1BH,6EH	&%HP<m_1> <m_2> <m_3>	131
Set justification. n=0 Left n=1 Center n=2 Right n=8 Left (No line feed) n=9 Center (No line feed) n=10 Right (No line feed)	[ESC] a <n>	1BH,61H	&%JR {n=2} &%JC {n=1} &%JL {n=0}	131
Reset horizontal and vertical tab stops.	[ESC] R	1BH,52H	&%HV	131
Set left/right print margins. n_1 = Left margin, n_2 = Right margin	[ESC] X <n_1><n_2>	1BH,58H	none	194
Vertical Motion				
Perform a fine line feed.	[ESC] J <n>	1BH,4AH	&%FM <m_1> <m_2> <m_3>	132
Perform a fine line feed in reverse.	[ESC] M <n>	1BH,4DH	&%FR <m_1> <m_2> <m_3>	136
Set 1/8-inch line spacing.	[ESC] 0	1BH,30H	&%ST	132
Set 7/72-inch line spacing.	[ESC] 1	1BH,31H	&%SG	133
Begin variable line spacing. (Enable [ESC] A <n>).	[ESC] 2	1BH,32H	none	133
Set variable line spacing to n/216 inch.	[ESC] 3 <n>	1BH,33H	&%SV <m_1> <m_2> <m_3>	132
Set variable line spacing to n/72 inch.	[ESC] A <n>	1BH,41H	none	133
Feed <n> lines at current spacing.	[ESC] d <n>	1BH,64H	&%FL <m_1> <m_2>	133
Feed <n> lines at current spacing in reverse.	[ESC] e <n>	1BH,65H	&%FB <m_1> <m_2>	133
Set vertical tab stops.	[ESC] B <n_1> <n_2> <n_3>...<n_i> 0	1BH,42H	none	135
Vertical tab.	[VT]	0BH	&%VT	134
Form feed.	[FF]	0CH	&%FF	135
Set top of form.	[ESC] 4	1BH,34H	&%TF	135
Set form length in lines.	[ESC] C <n>	1BH,43H	&%SL <m_1> <m_2>	135
Begin Auto line feed. n=0 End n=1	[ESC] 5 <n>	1BH,35H	&%CA {n=0} &%MA {n=1}	136
Set form length in inches.	[ESC] C [NUL] <n>	1BH,43H	&%SI <m_1> <m_2>	136
Reverse line feed.	[ESC]]	1BH,5DH	&%LR	136
Character Pitch				
Begin 10 CPI character pitch.	[DC2]	12H	&%F3	136

Begin 12 CPI character pitch.	[ESC] :	1BH,3AH	&%F2	136
Begin 17 CPI character pitch.	[SI]	0FH	&%F1	137
Set character pitch.	[ESC] [P <n>	1BH,5BH, 50H	&%F<n>	138
Set inter-character spacing.	[ESC] V <n>	1BH,56H	none	139
Begin 24 CPI character Pitch	[ESC][SI]	1BH,0FH	&%F4	137
Character Font				
Begin 12 x 12 draft print.	[ESC] # <0>	1BH,23H, 00H	&%QT	140
Set print quality mode. n=0 Draft (12 x 12) n=1 Large draft (12 x 14) n=2 NLQ (24 x 16) n=3 NLQ (24 x 16) n=4-7 Repeats 0-3	[ESC] I <n>	1BH,49H	&%QT {n=0} &%QU {n=1} &%QL {n=2} &%QS {n=3}	140
Begin Rotated font. (See command description).	[ESC] P <n>	1BH,50H	&%RI &%RF &%RN	141
Select character code page.	[ESC] [T <n_h> <n_l>	1BH,5BH, 54H	&%CP <m_1> <m_2> <m_3> <m_4>	143
Insert Euro character.	[ESC] [C <n>	1BH,5BH, 43H	&%EU	145
Print control character.	[ESC] ^ <n>	1BH,5EH	&%CC <m_1> <m_2> <m_3>	145
Redefine character set.	[ESC] [S …	1BH,5BH, 53H…		146
Define user-defined characters.	[ESC] = <y> <c_1> <c_2>…	1BH,3DH	none	147
Enable User-defined characters.	[ESC] > <n>	1BH,3EH	none	148
Enable OCR characters.	[ESC] y <11>	1BH,79H, 0BH	&%YX011	148
Disable OCR characters.	[ESC] y <12>	1BH,79H, 0CH	&%YX012	148
Cancel user-defined characters.	[ESC] $	1BH,24H	none	148
Character Attributes				
Select color.	[ESC] c <n>	1BH,63H	&%CL <m_1>	150
Begin one-line double-wide print.	[SO]	0EH	&%MW	150
Cancel one-line double-wide print.	[DC4]	14H	&%MN	150
Multi-line double-wide double-high mode. n=0 Standard mode n=1 Double-wide n=2 Double-high 3 = Both	[ESC] W <n>	1BH,57H	&%FS {n=0} &%FD {n=1} &%FH {n=3}	151
Enable/Disable overscore. n=0 End n=1 Begin	[ESC] _ <n>	1BH,5FH	&%CO {n=0} &%MO {n=1}	150
Begin Underline mode. n = 0 End n = 1 Begin	[ESC] - <n>	1BH,2DH	&%CU {n=0} &%MU {n=1}	152
Begin enhanced print.	[ESC] G	1BH,47H	&%ME	152
End enhanced print.	[ESC] H	1BH,48H	&%CE	152
Begin emphasized print.	[ESC] E	1BH,45H	&%MM	152
End emphasized print.	[ESC] F	1BH,46H	&%CM	152

Set print style. (See command description.)	[ESC] [@ ...	1BH,5BH, 40H…	&%DH &%SH	151
Select superscript.	[ESC] S <0>	1BH,53H, 00H	&%SP	153
Select subscript.	[ESC] S <1>	1BH,53H, 01H	&%SB	153
End superscript or subscript.	[ESC] T	1BH,54H	&%SE	153
Begin italics.	[ESC] % G	1BH,25H, 47H	&%MI	153
End italics.	[ESC] % H	1BH,25H, 48H	&%CI	153
Begin/End Rotated print.	[ESC] r <n>	1BH,72H	&%RX	154
Set Rotated Print Line Length	[ESC] s <n>	1BH,73H	&%RL	156
Page Mode				
Select Page Mode	[ESC] t <n>	1BH,74H	&%PM <m_1>	160
Set Page Mode Page Position.	[ESC] o <n_1> …	1BH,6FH	&%PY<m_1> <m_2> <m_3> <m4>	162
Set Page Mode Page Size	[ESC] u <n_1> …	1BH,75H	&%PS<m_1> <m_2> <m_3> <m4><m_5> <m6>	161
Exit Page Mode	[FF]	0CH	&%FF	163
Print Page Mode Page (Reenter page mode)	[ESC][FF]	1BH, 0CH	&%PP	163
APA Graphics				
Print single-density graphics. <n_1>=0...255 <n_2>=0…3 len=<n_1> + 256 * <n_2>	[ESC] K <n_1> <n_2>	1BH,4BH	none	165
Print half-speed double-density graphics.	[ESC] L <n_1> <n_2>	1BH,4CH	none	165
Print full-speed double-density graphics.	[ESC] Y <n_1> <n_2>	1BH,59H	none	165
Print quad-density graphics.	[ESC] Z <n_1> <n_2>	1BH,5AH	none	166
Select bi-directional or unidirectional print. n=0 Bi-directional n=1 Unidirectional	[ESC] U <n>	1BH,55H	&%GU {n=1} &%GB {n=0}	167
Print graphics in mode <m>.	[ESC] * <m> <n_1> <n_2>	1BH,2AH	none	166
Reassign graphic mode.	[ESC] ? <m><n>	1BH,3FH	none	167
Two Color Graphics				
Process horizontal graphics data.	[ESC] h <color> <length> <format> <data>	1BH,68H	none	168
Set horizontal graphic mode.	[ESC] * <m> <0> <0>	1BH,2AH	none	169
User Store (Graphic Save)				
Begin named macro record.	[ESC] [US] b <Name..> <0>	1BH,1FH, 62H	&%UB <Name..> <0>	172
Save macro data in user store.	[ESC] [US] m <Name..> <0>	1BH,1FH, 6DH	&%UM <Name..> <0>	173
End named macro record.	[ESC] [US] e <Name..> <0>	1BH,1FH, 65H	&%UG <Name..> <0>	172

Load item from user store.	[ESC] [US] l <Name..> <0>	1BH,1FH, 6CH	&%UL <Name..> <0>	173
Save user-defined characters.	[ESC] [US] c <Name..> <0>	1BH,1FH, 63H	&%UC <Name..> <0>	173
Run macro data from user store.	[ESC] [US] r <Name..> <0>	1BH,1FH, 72H	&%UR <Name..> <0>	173
Flag item as a start-up macro.	[ESC] [US] s <Name..> <0>	1BH,1FH, 6DH	&%US <Name..> <0>	174
Delete item from user store.	[ESC] [US] d <Name..> <0>	1BH,1FH, 64H	&%UD <Name..> <0>	174
Flush information from user store.	[ESC] [US] f ALL <0> or EXT <0>	1BH,1FH, 66H,00H	&%UF	174
Transfer user store to extended user store	[ESC] [US] t ALL <0>	1BH,1FH, 66H,00H	&%UF	174
Report on user store.	[ESC] [US] q <Name..> <0>	1BH,1FH, 72H	&%UQ <Name..> <0>	174
Return a report on user store.	[ESC] [US] ? <Name..> <0>	1BH,1FH, 72H	&%UQ <Name..> <0>	174
Process user macro.	[ESC] g <0>	1BH,67H, 00H	&%GP	176
Start macro record.	[ESC] g <1>	1BH,67H, 01H	&%GS	176
Stop macro record.	[ESC] g <2>	1BH,67H, 02H	&%GE	176
Stop macro record and save.	[ESC] g <3>	1BH, 67H, 03H	&%GW	176
Bar Codes				
Print bar code. n=0 Interleave 2 of 5 n=1 Code 39 n=2 Code 128 n=3 UPC A n=4 EAN-13 n=5 UPC E n=6 EAN-8 n= 7 Code 93 n = 8 Codabar	[ESC] b <n> ... [ETX]	1BH,62H	&%25 {n=0} &%39 {n=1} &%12 {n=2} &%UP {n=3} &%EA {n=4} &%UE {n=5} &%E8 {n=6} &%93 {n=7}	177
Set bar code height. n=0 Restore defaults n=1 - 9 Number of passes (0.11 inch per pass)	[ESC] [EM] B <n>	1BH,19H, 42H	&%BH <m_1><m_2>	179
Set bar code justification, HRI print mode, and print direction.	[ESC] [EM] J <n>	1BH,19H, 4AH	&%BJ<m_1><m_2>	179
Station Select Commands				
Select Receipt Station	[ESC]f	1BH,67H	&%SR	183
Select Validation station	[ESC]j	1BH,6AH	&%VS	183
Select Validation and load for n lines	[ESC]k<n>	1BH,6BH	&%VL<m_1>	183
Load form to "top of form"	[ESC]m	1BH,6DH	%&VD	183
Set Wait for form Timeout	[ESC][EM]C<n>	1BH,19H, 43H	None	191
Set Wait for Form Removal Timeout	[ESC][EM]D<n>	1BH,19H, 44H	None	192
Set Form Sense Delay	[ESC][EM]V<n>	1BH,19H, 56H	None	192

Set validation form stop	[ESC][EM]L<n>	1BH,19H, 5CH	None	192
Cancel form wait	[ENQ]<16>	05H,10H	None	193
Electronic Journal				
Electronic Journal Initialize and set password	[ESC][GS]I <Password><0>	1BH 1DH 49H	%&EI	185
Electronic Journal Erase the Electronic Journal	[ESC][GS]E <Password><0>	1BH 1DH 45H	&%EC	185
Print the Electronic Journal	[ESC][GS]P< S_l> <S_h>< L_l>< L_h>	1BH 1DH 50H	&%EP	185
Report the Electronic Journal	[ESC][GS]R< S_l> < S_h>< L_l>< L_h>	1BH 1DH 52H	&%EQ	186
Electronic Journal Begin Entry	ESC]l <3>	1BH 6CH	%&EB	
Electronic Journal Suspend Entry	[ESC]l <2>	1BH 6CH	&%ES	190
Electronic Journal Resume Entry	[ESC]l <1>	1BH 6CH	&%ER	190
Electronic Journal End Entry	[ESC]l <0>	1BH 6CH	&%EE	190
Activate/Deactivate Carbon Copy Journal	[ESC][GS]A<n>	1BH 1DH 41H	&%JO &%JF	191
Electronic Journal Mode Begin (Journal Station)	[ESC]{	1BH 7BH	None	189
Miscellaneous Commands				
Disable paper out sensor.	[ESC] 8	1BH,38H	&%PF	194
Enable paper out sensor.	[ESC] 9	1BH,39H	&%PO	194
Set left/right margins. n_1 = Left margin n_2 = Right margin	[ESC] X <n_1><n_2>	1BH,58H	none	194
Clear print buffer.	[CAN]	18H	&%RP	194
Query marker.	[ESC] q <n>	1BH,71H	none	195
Open cash drawer. n=1 Cash Drawer 1 n=2 Cash Drawer 2	[ESC] x <n>	1BH,78H	&%D1 {n=1} &%D2 {n=2}	195
Perform Auto Cut	[ESC] v	1BH,76H	&%FC	195
Audio alert.	[BEL]	07H	&%BL	196
Configure audio alert.	[ESC] [BEL] <n_1> <n_2> <n_3>	1BH,07H	none	196
Print suppress and data pass through.	[ESC] < <n>	1BH,3CH	&%PT <n>	198
Initialize printer.	[ESC] @	1BH,40H	none	196
Enable paper error mode operation.	[ESC] p <n>	1BH,70H	&%PE <m_1> <m_2>	196
Enable dynamic response.	[ESC] w <n>	1BH,77H	none	201
Begin multi-drop control.	[SOH] <n>	01H	none	201
Inquire status. (Refer to command descriptions.)	[ENQ] <n>	05H	none	203
Inquire cash drawer 1 status	[ENQ] <1>	05H 01H	none	203
Extended Diagnostics				
Set control feature commands.	[ESC] y <n>	1BH,79H	&%Y0 - 9 or &%YX<m1> <m2><m3> (for numbers >9)	199
Extended diagnostics.	[ESC] ~ <n>	1BH,7EH	none	271

Low Level Paper Motion Control

Print/Paper Motion

Function	**Carriage return**
ASCII	[CR]
Hexadecimal	0DH
Decimal	<13>
IPCL	&%CR
EPOS	0DH
Description	The [CR] command prints the contents of the print buffer (if any) and resets the next character print position to the left margin. A line feed is not performed unless auto-feed is active. The print rotation direction and the left margin command define the left margin.

Function	**Line feed**
ASCII	[LF]
Hexadecimal	0AH
Decimal	<10>
IPCL	&%LF
EPOS	0AH
Description	The [LF] command prints the contents of the buffer (if any) and advances paper one line at the current default line spacing. The next character print position is not reset to the left margin unless auto-CR is active.

Horizontal Motion Control

Several commands can be used to control the horizontal position of characters. Many applications use space control to position fields. However, the POSjet® 1500 Printer has the ability to control character position with horizontal tab stops. This is done using the horizontal tab [HT] to move to those tab stops.

Function	**Horizontal tab**
ASCII	[HT]
Hexadecimal	09H
Decimal	<9>
IPCL	&%HT
EPOS	[HT]
Description	The [HT] command inserts spaces in the print buffer up to the next tab stop. The default tab locations are every eight spaces.

Function	**Back space**
ASCII	[BS]
Hexadecimal	08H
Decimal	<8>
IPCL	&%BS
EPOS	[BS]
Description	The [BS] command moves the print buffer one character width to the left. The pointer position cannot be moved to the left of the left margin. [BS] does not cause the buffer to be printed, the following data is OR'ed with the previous data.

Function	**Set horizontal tab stops**
ASCII	[ESC] D <n_1> <n_2> <n_3> ... <n_i> 0
Hexadecimal	1BH 44H <n_1> <n_2> <n_3> ... <n_i> 00H
Decimal	<27> <68> <n_1> <n_2> <n_3> ... <n_i> <0>
IPCL	none
EPOS	[ESC] D <n_1> <n_2> <n_3> ... <n_i> 0
Description	The [ESC] D <n_1> <n_2> <n_3> ... <n_i> 0 command sets tab stops at the character columns specified by <n>. The end of the settings is specified by a <0>. All previously set tabs will be cleared. The restore-default procedure other than to re-specify the tabs. Column sizes are in accordance with the current character pitch. Setting tabs that are beyond the station width is possible. A [CR] is inserted when the tab is used. Printing begins at the home position. The power up default is every eight spaces, i.e., 9, 17, 25, and so on.

Function	**Reset horizontal and vertical tab stops**
ASCII	[ESC] R
Hexadecimal	1BH 52H
Decimal	<27> <82>
IPCL	&%HV
EPOS	none
Description	The [ESC] R command resets horizontal and vertical tab stops to the power up configuration. The power up horizontal default is every eight spaces, i.e., 9, 17, 25, and so on. The vertical default is every line.

Function	**Set Justification**	
ASCII	[ESC] a <n>	
Hexadecimal	1BH 61H <n>	
Decimal	<27> <97> <n>	
IPCL	&%JL, &%JC, &%JR	
EPOS	[ESC] a <n>	
Description	The [ESC] a <n> command sets the horizontal justification.	
Where <n>	0 = Left justified	&%JL
	1 = Center justified	&%JC
	2 = Right justified	&%JR
	8 = Left justified (no line feed)	None
	9 = Center justified (no line feed)	None
	10 = Right justified (no line feed)	None
	The print format of the printer can be right, center, or left justified. The value of <n> specifies the justification. The power on default is left justified.	
Note 1	The justify commands do not effect graphics.	

Function	**Set horizontal position**
ASCII	[ESC] n $<n_1>$ $<n_2>$
Hexadecimal	1BH 6EH $<n_1>$ $<n_2>$
Decimal	<27> <110> $<n_1>$ $<n_2>$
IPCL	&%HP $<m_1>$ $<m_2>$ $<m_3>$
EPOS	[ESC]$ $<n_1>$ $<n_2>$
Description	The [ESC] <n> $<n_1>$ $<n_2>$ command sets the print position to $<n_1>$ + $<n_2>$ * 256.

Vertical Motion Control

Function	**Perform a fine line feed**
ASCII	[ESC] J <n>
Hexadecimal	1BH 4AH <n>
Decimal	<27> <74> <n>
IPCL	&%FM <m_1> <m_2> <m_3>
EPOS	[ESC] J <n>
Description	The [ESC] J <n> command prints the contents of the buffer and performs a line feed of n/216 inch. The default line spacing value is not changed. The next character print position is reset to the left margin if the Auto-CR mode is set.
Note 1	In EPOS mode, the command performs feeds in n/144-inch increments.
Note 2	Immediately after APA graphics, the command is adjusted for the difference between 72 dpi graphics and 96 dpi print.

Function	**Set variable line spacing to n/216 inch**
ASCII	[ESC] 3 <n>
Hexadecimal	1BH 33H <n>
Decimal	<27> <51> <n>
IPCL	&%SV <m1> <m2> <m3>
EPOS	[ESC] 3 <n>
Description	The [ESC] 3 <n> command sets the default line spacing to n/216 inch. Set n = 1 to 255. The line feed spacing used by [LF] is set to values other than 1/8 or 7/72 inch. The command takes effect immediately. **Note 1** In EPOS mode, the command performs line feeds in n/144-inch increments.

Function	**Set line spacing to 1/8 inch**
ASCII	[ESC] 0
Hexadecimal	1BH 30H
Decimal	<27> <48>
IPCL	&%ST
EPOS	[ESC] 2
Description	The [ESC] 0 command sets the default line spacing to 1/8 inch (27/216 inch), which is the standard eight lines per inch line spacing at initial power-up.
Note 1	In EPOS mode, the command sets 1/6-inch spacing or six lines per inch.

Function	**Set line spacing to 21/216 inch or 7/72 inch**
ASCII	[ESC] 1
Hexadecimal	1BH 31H
Decimal	<27> <49>
IPCL	&%SG
EPOS	none
Description	The [ESC] 1 command sets the default line spacing to 21/216 inch. Use 21/216-inch line spacing for all-points-addressable (APA) graphics printing.

Function	**Set variable line spacing to n/72 inch**
ASCII	[ESC] A <n>
Hexadecimal	1BH 41H <n>
Decimal	<27> <65> <n>
IPCL	none
EPOS	none
Description	The [ESC] A <n> command sets the default line spacing to n/72. Set n = 1 to 85. Variable line spacing does not take effect until enabled by the [ESC] 2 command. The command is provided to maintain backward compatibility with the Ithaca® Series 50, OKIDATA, IBM, and other printers. It can also be used to print on preprinted forms.

Function	**Enable [ESC] A <n> variable line spacing**
ASCII	[ESC] 2
Hexadecimal	1BH 32H
Decimal	<27> <50>
IPCL	none
EPOS	none
Description	The [ESC] 2 command is a companion to the [ESC] A <n> command and puts the specified line spacing into effect. It remains in effect until another line spacing command is issued.

Function	**Feed <n> lines at the current spacing**
ASCII	[ESC] d <n>
Hexadecimal	1BH 64H <n>
Decimal	<27> <100> <n>
IPCL	&%FL <m1> <m2>
EPOS	[ESC] d
Description	The [ESC] d <n> command prints the contents of the buffer (if any) and performs <n> line feeds at the current line spacing. The command does not change the default line spacing value. The next character print position is reset to the left margin.
Note 1	The IPCL command prints from 00 to 99 lines. For example, if you wish to feed 12 lines, the IPCL command would be as follows: &%FL12.

Function	**Reverse feed <n> lines at the current spacing**
ASCII	[ESC] e <n>
Hexadecimal	1BH 65H <n>
Decimal	<27> <101> <n>
IPCL	&%FB <m1> <m2>
EPOS	[ESC] e
Description	The [ESC] e <n> command prints the contents of the buffer (if any) and performs <n> reverse line feeds at the current line spacing. The command does not change the default line spacing value. The next character print position is reset to the left margin.

Note 1 The IPCL command prints from 00 to 99 lines. For example, if you wish to feed 12 lines, the IPCL command would be as follows: &%FL12.

Function	**Vertical tab**
ASCII	[VT]
Hexadecimal	0BH
Decimal	<11>
IPCL	&%VT
EPOS	(VT)
Description	The printer sets a line counter to the top of the form at reset and when a set top of form command is issued. By setting vertical tab stops, various form positions can be reached with a [VT] operation.

Function	**Set vertical tab stops**
ASCII	[ESC] B <n_1> <n_2> <n_3> ... <n_i> 0
Hexadecimal	1BH 42H <n_1> <n_2> <n_3> ... <n_i> 00H
Decimal	<27> <66> <n_1> <n_2> <n_3> ... <n_i> <0>
IPCL	none
EPOS	[ESC] B <n_1> <n_2> <n_3> ... <n_i> 0
Description	The [ESC] B <n_1> <n_2> <n_3> ... <n_i> 0 command sets tab stops at line positions specified by <n>. The end of the setting is specified by a <0>. All previously set tabs will be cleared. If n_n is less than n_{n-1}, then the command is in error, and all of the following information is printed. In other words, tab stops must be entered sequentially in order to be accepted. A total of 64 tab stops can be specified. (The power on default is a vertical tab on every line).

Function	**Reset horizontal and vertical tab stops**
ASCII	[ESC] R
Hexadecimal	1BH 52H
Decimal	<27> <82>
IPCL	&%HV
EPOS	none
Description	The [ESC] R command resets horizontal and vertical tab stops to power up configuration. The power up horizontal default is every eight spaces, i.e., 9, 17, 25, etc. The vertical default is every line.

Function	**Form Feed**
ASCII	[FF]
Hexadecimal	0CH
Decimal	<12>
IPCL	&%FF
EPOS	none
Description	The [FF] command performs a form feed to the top of the form.
Note 1	The form feed command can be disabled. Set the form length to zero.

Function	**Set top of form**
ASCII	[ESC] 4
Hexadecimal	1BH 34H
Decimal	<27> <52>
IPCL	&%TF
EPOS	[ESC] L
Description	The [ESC] 4 command sets the top of form to the current position.

Function	**Set form length in lines**
ASCII	[ESC] C <n>
Hexadecimal	1BH 43H <n>
Decimal	<27> <67> <n>
IPCL	&%SL <m_1> <m_2>
EPOS	[ESC] C <n>
Description	The [ESC] C <n> command sets the form length to <n> lines at the current line spacing. If the current page position is greater than the new page length, the command also sets the current position as the top of form.

Function	**Set form length in inches**
ASCII	[ESC] C [NUL] <n>
Hexadecimal	1BH 43H <0> <n>
Decimal	<27> <67> <0> <n>
IPCL	&%SI <m_1> <m_2>
EPOS	none
Description	The [ESC] C [NUL] <n> command sets the form length to <n> inches. If the current page position is greater than the new page length, the command also sets the current position as the top of form. If zero inches are specified, the form feed and vertical tab commands are ignored.

Function	**Begin auto line feed**
ASCII	[ESC] 5 <n>
Hexadecimal	1BH 35H <n>
Decimal	<27> <53> <n>
IPCL	&%MA (Begin)
IPCL	&%CA (End)
EPOS	none
Description	The [ESC] 5 <1> command sets auto line feed mode. [ESC] 5 <0> command ends auto line feed mode.
Note 1	The begin and end auto line feed command overrides the configuration setting.

Function	**Reverse line feed**
ASCII	[ESC]]
Hexadecimal	1BH 5DH
Decimal	<27> <93>
IPCL	&%LR
EPOS	none
Description	The [ESC]] command performs a reverse line feed at the current line spacing.
Note 1	The POSjet® 1500 Printer can tolerate no more than 1/2 inch of reverse feed.

Character Pitch

Character pitch commands that set specific characters per inch (cpi) disable any right-side spacing set by the [ESC] V <n> command. In addition, when font changes are made, the character pitch is maintained.

Function	**Begin 10 cpi character pitch**
ASCII	[DC2]
Hexadecimal	12H
Decimal	<18>
IPCL	&%F3
EPOS	[ESC][SP] <n>
Description	The [DC2] command sets 9.905 characters per inch print pitch.

Function	**Begin 12 cpi character pitch**
ASCII	[ESC] :
Hexadecimal	1BH 3AH
Decimal	<27> <58>
IPCL	&%F2
EPOS	[ESC] [SP] <n>
Description	The [ESC] : command sets 12.235 characters per inch print pitch.

Function	**Begin 17 cpi character pitch**
ASCII	[SI]
Hexadecimal	0FH
Decimal	<15>
IPCL	&%F1
EPOS	[ESC] [SP] <n>
Description	The [SI] command sets 17.333 characters per inch print pitch.

Function	**Begin 24 cpi character pitch**
ASCII	[ESC] [SI]
Hexadecimal	1BH 0FH
Decimal	<27> <15>
IPCL	&%F4
EPOS	[ESC] [SP] <n>
Description	The [ESC] [SP] command sets 23.111 characters per inch print pitch.

Function	**Set character pitch**
ASCII	[ESC] [P <n>
Hexadecimal	1BH 5BH 50H <n>
Decimal	<27> <91> <80> <n>
IPCL	&%F1, &%F2, &%F3, &%F4, &%F5, &%F6, &%F7
EPOS	[ESC] [SP] <n>
Description	The [ESC] [P <n> command sets character per inch print pitch to <n>. The printer resolution limits the exact print pitch. The following table lists the exact pitch for various values on <n>.

<n>	Resulting Characters per Inch	IPCL
1	1.00	
2	2.00	
3	3.01	
4	4.00	
5	4.95	
6	5.94	
7	6.93	
8	8.00	&%F7
9	9.04	
10	9.90	&%F3
11	10.95	
12	12.23	&%F2
13	13.00	
14	13.87	
15	14.86	&%F6
16	16.00	
17	17.33	&%F1
18	17.33	
19	18.91	
20	20.8	&%F5
21	20.8	
22	23.11	
23	23.11	
24	23.11	&%F4
25	23.11	
26	26	
27	26	
28	26	
29	29.71	
30	29.71	

Table 32 Character Pitch

This command disables any right-side spacing set by the [ESC] V <n> command. In addition when font changes are made, the character pitch is maintained.

Function	**Set inter-character spacing**
Mode	Global
ASCII	[ESC] V <n>
Hexadecimal	1BH 56H <n>
Decimal	<27> <86> <n>
IPCL	none
EPOS	[ESC] [SP] <n>
Description	The [ESC] V <n> command sets inter-character spacing by adding white space between characters. The value of <n> sets the spacing in 216 of an inch. The printer can only set the spacing in 208 of an inch and converts 216 to the nearest 208 of an inch. Each font has a basic size, and the inter-character spacing value is added to the basic size. Therefore, the affect of this command on characters per inch (cpi) will depend on the font selected.
Note 1	The [ESC] V <n> command disables any pitch settings established by pitch set commands that establish a cpi (like [ESC] [P <n>). After a set right-side spacing command is issued, the pitch will vary with font selection. Font selections use the current, active, right-side spacing.
Note 2	With the inter-character spacing command, the pitch cannot be set less than the font size. Therefore, it is not as effective as the pitch command, [ESC] [P <n>. The following table lists the cpi equivalent for several values of <n>.

<n>	Small Draft (cpi)	Large Draft (cpi)	NLQ (cpi)
0	17.33	14.86	13
1	16	13.9	12.24
2	14.86	13	11.6
3	13.9	12.24	10.9
4	13	11.6	10.4
5	12.24	10.9	9.90

Table 33 Inter-character Spacing

Character Font

Function	**Begin 12 x 12 draft print mode**
ASCII	[ESC] # <0>
Hexadecimal	1BH 23H 00H
Decimal	<27> <35> <0>
IPCL	&%QT
EPOS	[ESC] ! <n>
Description	The [ESC] # <0> command begins 12 x 12 draft print mode. Draft print is provided to maintain compatibility with other Ithaca® products.

Function	**Set print quality mode**
ASCII	[ESC] I <n>
Hexadecimal	1BH 49H <n>
Decimal	<27> <73> <n>
IPCL	&%QT 12 x 12 draft mode &%QU 12 x 14 large draft mode &%QL 24 x 16 near letter quality (NLQ) mode &%QS 24 x 16 near letter quality (NLQ) mode
EPOS	[ESC] x <n> and/or [ESC] ! <n>
Description	The [ESC] I <n> command begins draft, large draft or near letter quality print mode.
Where n	0 = 12 x 12 draft 1 = 12 x 14 large draft 2 = 24 x 16 near letter quality (NLQ) 3 = 24 x 16 near letter quality (NLQ) 4 - 7 repeats 0 - 3 Draft print modes are high-speed print modes intended to provide quality print with minimal ink usage. The 12 x 12 draft font is the most efficient. The 12 x 14 large draft font produces a larger more readable character but with added ink usage. NLQ print mode is a two pass half-speed font. It provides what is generally regarded as near letter quality print at reduced speed with greater ink usage.
Note 1	In EPOS mode, [ESC] x <n> is similar to [ESC] I <n>. [ESC] ! <n> performs a similar function; however, NLQ is not available.
Note 2	NLQ fonts cannot be rotated 90° or 270°.
Note 3	Switching from draft to NLQ modes causes the printer to print all previously received information. Consequently, auto-center and right justify do not print mixed draft and NLQ font as expected.

Function	**Begin rotated font and/or Right to left entry**
ASCII	[ESC] P <n>
Hexadecimal	1BH 50H <n>
Decimal	<27> <80> <n>
IPCL	&%RI {n=2} &%RF {n=1} &%RN {n=0}
EPOS	[ESC] V <n>
Description	The [ESC] P <n> command sets the print font to a rotated 90° or 270° font.
Where n	n = 0 Normal n = 1 Rotate 90° (Single pass, 12 x 12 draft) n = 2 Rotate 270° (Single pass, 12 x 12 draft) n = 5 Rotate 90° (Two pass, 12 x 12 draft or 12 x 14 large draft) n = 6 Rotate 270° (Two pass, 12 x 12 draft or 12 x 14 large draft) n = 8 Enter Text right to left n = 9 Enter Text right to left and Rotate 90° (Single pass, 12 x 12 draft) n = 10 Enter Text right to left and Rotate 270° (Single pass, 12 x 12 draft) n = 11 Enter Text right to left and Rotate 90° (Two pass, 12 x 12 draft or 12 x 14 large draft) n = 12 Enter Text right to left and Rotate 270° (Two pass, 12 x 12 draft or 12 x 14 large draft)

In Modes 1 and 2, 12 x 12 draft font is rotated 90 or 270° and printed in a single pass. Double-wide and double-high fonts are available. However, because the font is rotated, double wide makes the characters taller and double high makes the characters wider. Modes 1 and 2 distort the font, but they produce the fastest rotated print.

Modes 5 and 6 rotate the 12 x 12 draft or 12 x 14 large draft and maintain the aspect ratio of the fonts. Modes 5 and 6 require two passes by the print cartridge, which slows the print time considerably. The font that is rotated by Mode 5 or 6 is selected by the [ESC] I <n> command. <n> may be zero or one.

NLQ fonts cannot be rotated 90° or 270°. The current pitch sets the spacing between lines. If eight characters per inch (cpi) is set, the printer produces the equivalent of eight lines per inch (lpi) rotated print.

Modes 8-12 allow right to left text entry. (Note: right to left text entry is not supported in formatted rotated print mode (See the [ESC]r command for formatted rotated print.)

Character sets and Code Pages

The POSjet®1500 Printer supports 65 different international character sets. In IBM and EPOS printers, there are two ways of selecting a character set. One way substitutes international characters in the upper 128 characters of a standard character set. The substitution technique supports a few different countries. However, as more and more countries were added, too many characters were being replaced. It became a problem for the application to match the characters displayed and printed. To solve the problem, a second method of selecting a character set was developed - code pages. The printer and display use the same code page. The application displays and prints the same characters. IBM and EPOS defined new commands to select code pages and left the old commands in effect.

The POSjet®1500 Printer supports international character sets as well as code pages. To allow the most flexibility for the application programmer, both methods are extended in the POSjet®1500 Printer. In IBM mode, there are 19 character sets and 60 code pages. In EPOS mode, there are 57 character sets and five code pages.[15]

The POSjet®1500 Printer allows the IBM code page selection command to choose character sets as well as normal IBM code pages. The EPOS character set select command has been extended to allow additional character sets over and above the 11 defined by EPOS. The EPOS code page select command has not been extended because there is no EPOS definition beyond the first six ID's.

All characters in code pages as well as character sets are addressed as zero through 255. (Characters below 32 must be addressed with the [ESC] ^ <n> command.) Code pages may be changed at any time and are active for all features including rotated print. To allow other code pages to be created by an application, a redefine character set command is provided.

As discussed above, there are two commands for language selection in IBM mode. The first is [ESC] !, which selects one of 19 international character sets. The [ESC]! command does not allow all of the possible character sets to be selected, it is provided for compatibility with older programs only. The second is [ESC][T, which selects any of the 58 code pages. In EPOS mode, the [ESC] R command has been expanded to select any of the 59 international character sets or code pages.

Function	**Select international character set**
ASCII	[ESC] ! <n>
Hexadecimal	1BH 21H <n>
Decimal	<27> <33> <n>
IPCL	&%CS <n>
EPOS	[ESC] R <n>
Description	The [ESC] ! <n> command selects international character set <n>. In standard mode, the value of <n> is as follows.

<n>	Language	<n>	Language
64-'@'	ASCII (slashed zero)	73-'I'	Italian
65-'A'	ASCII (unslashed zero)	74-'J'	French Canadian
66-'B'	British	75-'K'	Spanish
67-'C'	German	76-'L'	Swedish II
68-'D'	French	77 -'M'	Swedish III
69-'E'	Swedish	78-'N'	Swedish IV
70-'F'	Danish	79-'O'	Turkish
71-'G'	Norwegian	80-'P'	Swiss I
72-'H'	Dutch	81-'Q'	Swiss II

Table 34 Language Table ID's

[15] Epson provides limited code page support through ID to code page translation. Only six translations are defined.

Function	**Select character code page**[16]
ASCII	[ESC] [T <n_h> <n_l>
Hexadecimal	1BH 5BH 54H <n_h> <n_l>
Decimal	<27> <91> <84> <n_h> <n_l>
IPCL	&%CP <m_1> <m_2> <m_3> <m_4>
EPOS	[ESC] t <n>
Description	The [ESC] [T <n_h> <n_l> command selects character code page <n_h> <n_l>. The POSjet®1500 Printer supports many code pages. The following code pages are supported.

Code Page	Country Code/Language Set	Decimal <n_h> <n_l>	Hex <n_h> <n_l>
64	USA (Slashed 0)	0,64	0H,040H
65	USA (Unslashed 0)	0,65	0H,041H
66	British	0,66	0H,042H
67	German	0,67	0H,043H
68	French	0,68	0H,044H
69	Swedish I	0,69	0H,045H
70	Danish	0,70	0H,046H
71	Norwegian	0,71	0H,047H
72	Dutch	0,72	0H,048H
73	Italian	0,73	0H,049H
74	French Canadian	0,74	0H,04AH
75	Spanish	0,75	0H,04BH
76	Swedish II	0,76	0H,04CH
77	Swedish III	0,77	0H,04DH
78	Swedish IV	0,78	0H,04EH
79	Turkish	0,79	0H,04FH
80	Swiss I	0,80	0H,050H
81	Swiss II	0,81	0H,051H
91	Welsh	0,91	0H,05BH
437	USA	1,181	1H,0B5H
774	Baltic 774	3,6	3H,006H
850	Multilingual	3,82	3H,052H
852	East Europe Latin II-852	3,84	3H,054H
855	Cyrillic I-855	3,87	3H,057H
857	Turkey 857	3,89	3H,059H
858	Multilingual Euro	3,90	3H,05AH
860	Portugal	3,92	3H,05CH
861	Icelandic-861	3,93	3H,05DH
862	Hebrew NC (862)	3,94	3H,05EH
863	Canada French	3,95	3H,05FH

[16] There is an Aribic Character set avalable on special order with some emulation restrictions.

Code Page	Country Code/Language Set	Decimal <n_h> <n_l>	Hex <n_h> <n_l>
865	Norway	3,97	3H,061H
866	Cyrillic II-866	3,98	3H,062H
869	Greek 869	3,101	3H,065H
895	Kamenicky (MJK)	3,127	3H,07FH
1008	Greek 437	3,240	3H,0F0H
1009	Greek 928	3,241	3H,0F1H
1011	Greek 437 Cyprus	3,243	3H,0F3H
1012	Turkey	3,244	3H,0F4H
1013	Cyrillic II-866	3,245	3H,0F5H
1014	Polska Mazovia	3,246	3H,0F6H
1015	ISO Latin 2	3,247	3H,0F7H
1016	Serbo Croatic I	3,248	3H,0F8H
1017	Serbo Croatic II	3,249	3H,0F9H
1018	ECMA-94	3,250	3H,0FAH
1019	Windows East Europe	3,251	3H,0FBH
1020	Windows Greek	3,252	3H,0FCH
1021	Latin 5 (Windows Turkey)	3,253	3H,0FDH
1022	Windows Cyrillic	3,254	3H,0FEH
1024	Hungarian CWI	4,0	4H,000H
1026	ISO Latin 4 (8859/4)	4,2	4H,002H
1027	Ukrainian	4,3	4H,003H
1028	Roman-8	4,4	4H,004H
1029	ISO Latin 6 (8859/10)	4,5	4H,005H
1030	Hebrew NC (862)	4,6	4H,006H
1031	Hebrew OC	4,7	4H,007H
1032	Windows Hebrew	4,8	4H.008H
1033	KBL- Lithuanian	4,9	4H,009H
1034	Windows Baltic	4,10	4H,00AH
1035	Cyrillic-Latvian	4,11	4H,00BH
1072	Bulgarian	4,48	4H,030H

Table 35 Code Page Definition Table

Note 1 The code page field is a 16-bit field that is equivalent to the code page number. For example, 1 * 256 + 181 = 437. For the IPCL command, the page is specified in ASCII as a 4-byte field.

Function	**Print control character**
ASCII	[ESC] ^ <n>
Hexadecimal	1BH 5EH <n>
Decimal	<27> <94> <n>
IPCL	&%CC <m1> <m2> <m3>
EPOS	[ESC] ^ <n>
Description	The [ESC] ^ <n> command allows characters from zero to 31 codes to be printed. During normal operation, characters from zero to 31 are control characters. The command turns off control code translation for the following character. <n> can be from zero to 255.

Function	**Insert Euro character**
ASCII	ESC] [C <n>
Hexadecimal	1BH 5BH 43H <n>
Decimal	<27> <91> <67> <n>
IPCL	&%EU
Description	The [ESC] [C <n> command allows an application to replace any character in the currently active character set with the Euro character. The character to be replaced is defined by <n>. For example, if the currently active character set is CP 850 (multi-lingual) and 0D5H character is to be the Euro character, "1BH 5BH 43H 0D5H" replaces the character at 0D5H with the Euro symbol.

Euro Character Substitution Matrix			
Name	**Epson**	**IBM**	**Code Page Insertion Point (hex)**
850	26	850	0xD5
Turkey 857	57	857	0XD5
Win Cyrillic	52	1022	0X88
Win Turkish	51	1021	0X80
Win Greek	50	1020	0X80
Win Hebrew	62	1032	0X80
Win Baltic	68	1034	0X80

Table 36 Euro Character Substitution Matrix

Function	**Redefine character set**
ASCII	[ESC] [S <L_L> <L_H> <B_C> <T_{1L}><T_{1H}> <T_{2L}><T_{2H}> <T_{3L}><T_{3H}> …<T_{nL}><T_{nH}>
Hexadecimal	1BH 5BH 53H …
Decimal	<27> <91> <83> …
IPCL	none

Description

The [ESC] [S <L_L> <L_H> <B_C> <T_{1L}><T_{1H}> <T_{2L}><T_{2H}> <T_{3L}><T_{3H}> … <T_{nL}><T_{nH}> command allows an application to replace or redefine the active character set mapping in the printer. Where <L_L> <L_H> defines the total length of the following data: <L_L> + 256 * <L_H> = 1 + 2 * is the total number of characters to be replaced; <B_C> is the first character in the active map to be replaced; and <T_{1H}> <T_{1L}>[17] is the internal address of the replacement character image. The mapping of a print pattern to each character address is referred to a code page or character set. At any given time, the printer character set is comprised of 256 characters. Each character is addressed by an 8-bit value generally referred to as a character code. For example, if you want to print an 'A', it would be addressed by sending a <65> decimal to the printer. Sixty-five predefined code pages or character maps assign characters to a particular address built into the printer. Occasionally, an application needs to redefine a character or group of characters in a code page. The POSjet® 1500 Printer allows the map for any code page to be redefined or replaced. The define character set command allows any character or group of characters to be replaced with any other printable character. Over 500 printable master characters are defined in the printer. For example, to redefine the character map for the 35th character and replace it with internal master character 346, the redefine character set command is used as follows:

```
[ESC] [ S <3> <0> <35> <90> <1>
          ^^^^^   ^^   ^^^^^^
           |       |     +- 346th Character in the Master Set
           |       |             [(1 * 256) + 90]
           |       +------- 35th Character
           +--------------- 3 bytes to follow [(0 * 256) + 3]
```

The new map remains until the printer is power cycled or the character set is redefined. The code page and character set commands completely redefine the table.

Note 1

The OCR character set disable command, [ESC] y <12>, also restores the character set to the original definition.

[17] The internal character map is provided in the *Master Character Set Definitions Guide*, PN 100-9785.

Function	**Define user-defined characters**	**Not valid in page mode**
ASCII	[ESC] = <y> <c_1> <c_2> [<x_1> <d_1> … d(y *x* x_1)] … [<x_k> <d_1> … d (y *x* x_k)]	
Hexadecimal	1BH 3DH <y> …	
Decimal	<27> <51> <y> …	
Range	y = 2 or 3 $32 \le c_1 \le c_2 \le 126$ $0 \le x \le 12$ (12 x 12 font) $0 \le x \le 14$ (12 x 14 font) $0 \le x \le 16$ (24 x 16 font) $0 \le d_1 \ldots d\ (y\ x\ x) \le 255$	
IPCL	none	

Description

The [ESC] = <y> <c_1> <c_2> [<x_1> <d_1> … d(y *x* x_1)] … [<x_k> <d_1> … d (y *x* x_k)] command defines user-defined characters from character code <c_1> to <c_2>. <y> and <x> are the configurations of a user-defined character. <y> specifies the number of bytes in the vertical direction. <x> specifies the number of bytes in the horizontal direction. Character code ranges from zero to 255 (FFH) can be defined by <c_1> and <c_2>. Up to 32 user-defined characters can be defined. Data (<d>) specifies a bit printed to one and not printed to zero. At the default, user-defined characters are not defined and the internal character set is printed. Once the user-defined characters have been defined, they are available until [ESC] $ is executed; the user-defined characters are redefined; the power is turned off; or the printer is reset.

Each internal font, draft, large draft, and NLQ, has its own 32-character storage area. If possible, the currently selected font will be used to select which user-defined font is defined. If the font being defined is not suitable for the currently selected mode, a suitable font will be temporarily selected for the definition. If <y> = 2, the 12 x 12 draft font or the 12 x 14 large draft font can be defined. If <y> = 3, only the 16 x 24 NLQ font can be defined. If <y> = 2 and the NLQ font is active, the large draft user-defined font will be loaded. If <y> = 3 and a draft font is active, the NLQ user-defined font will be loaded. To aid in defining and generating user fonts, a font generation program is available from our web site or by contacting TransAct's Ithaca® facility.

Function	**Cancel user-defined characters**
ASCII	[ESC] $
Hexadecimal	1BH 24H
Decimal	<27> <36>
IPCL	none
Description	The [ESC] $ command removes all user-defined characters from the printer's memory. After the user-defined characters are canceled, the internal character set is printed.

Function	**Enable user-defined characters**
ASCII	[ESC] > <n>
Hexadecimal	1BH 3EH <n>
Decimal	<27> <62> <n>
Range	<0>, <1>, 0, or 1 1 Enables the characters 0 Disables the characters
IPCL	none
Description	The [ESC] > <n> command enables or disables the user-defined characters. The internal character set is printed.

Function	**Enable OCR characters**
ASCII	[ESC] y <11>
Hexadecimal	1BH 79H 0BH
Decimal	<27> <121> <11>
IPCL	&%YX011
EPOS	[ESC] y <11>
Description	The [ESC] y <11> command replaces 30 characters in the currently selected character set with OCR-MA3 characters. OCR characters are only available in NLQ mode; NLQ mode is automatically selected when OCR is enabled.
Note 1	Do not switch out of NLQ mode until after the OCR characters are disabled. Other fonts do not contain these characters and will not print correctly.
Note 2	The characters printed by the POSjet® 1500 Printer follow the format defined in the ANSI X3.111-1986 Standard. They should be printed in ten or 12 cpi. By enabling enhanced print, the characters have improved definition but print at a slower speed.

Function	**Disable OCR characters**
ASCII	[ESC] y <12>
Hexadecimal	1BH 79H 0CH
Decimal	<27> <121> <12>
IPCL	&%YX012
EPOS	[ESC] y <12>
Description	The [ESC] y <12> command returns the 30 OCR characters to the previously selected character set. It does not restore the print mode.
Note	Any character definitions defined by the redefine character set command are also replaced by the [ESC] y <12> command. Character Attribute Commands

OCR Characters

Character	Name	Location Hex, Dec	ASCII Equivalent
0	Number 0	30H,48	0
1	Number 1	31H,49	1
2	Number 2	32H,50	2
3	Number 3	33H,51	3
4	Number 4	34H,52	4
5	Number 5	35H,53	5
6	Number 6	36H,54	6
7	Number 7	37H,55	7
8	Number 8	38H,56	8
9	Number 9	39H,57	9
A	Letter A	41H,65	A
B	Letter B	42H, 66	B
C	Letter C	43H,67	C
D	Letter D	44H,68	D
E	Letter E	45H, 69	E
F	Letter F	46H, 70	F
G	Letter G	47H, 71	G
H	Letter H	48H, 72	H
I	Letter I	49H, 73	I
J	Letter J	4AH, 74	J
K	Letter K	4BH, 75	K
L	Letter L	4CH, 76	L
M	Letter M	4DH,77	M
N	Letter N	4EH,78	N
O	Letter O	4FH, 79	O
P	Letter P	50H,80	P
Q	Letter Q	51H, 81	Q
R	Letter R	52H,82	R
S	Letter S	53H, 83	S
T	Letter T	54H, 84	T
U	Letter U	55H,85	U
V	Letter V	56H, 86	V
W	Letter W	57H, 87	W
X	Letter X	58H,88	X
Y	Letter Y	59H,89	Y
Z	Letter Z	5AH, 90	Z
▶	Symbol Hook	7EH,126	~
▶	Symbol Chair	60H,96	`
▶	Symbol Fork	5FH,95	_
+	Plus Sign	2BH,43	+
-	Minus Sign	2DH,45	-
.	Period	2EH,46	.
/	Slant	2FH,47	/
$	Dollar Sign	24H,36	$
>	Greater Than Sign	3EH,62	>
"	Quotation Mark	22H,34	“

Table 37 OCR MA-3

Character Attributes

Function	**Select color**
ASCII	[ESC] c <n>
Hexadecimal	1BH 63H <n>
Decimal	<27> <99> <n>
IPCL	&%CL <m_1>
EPOS	none
Description	The [ESC] c <n> command selects the print color and should match the color of the pen installed.
Where <n>	0 = Black 1 = Red 2 = Green 3 = Blue

Function	**Begin one-line double-wide print**
ASCII	[SO]
Hexadecimal	0EH
Decimal	<14>
IPCL	&%MW
EPOS	none
Description	The [SO] command causes subsequent characters to be printed at twice the currently selected character width. For example, ten cpi becomes five cpi, 17 cpi becomes 8.5 cpi, etc. The [SO] command remains in effect until: A valid line terminator is received ([CR], [LF], or [ESC] J <n> (fine line feed)); The command is canceled; or the maximum number of characters per line is reached and the printer performs an auto-print.

Function	**Cancel one-line double-wide print**
ASCII	[DC4]
Hexadecimal	14H
Decimal	<20>
IPCL	&%MN
EPOS	none
Description	The [DC4] command cancels one-line double-wide mode set by the [SO] command and allows single- and double-wide characters to be printed on the same line.

Function	**Enable/Disable overscore**
ASCII	[ESC] _ <n>
Hexadecimal	1BH 5FH 01H
Decimal	<27> <95> <n>
IPCL	&%MO (Begin)
IPCL	&%CO (End)
EPOS	[ESC] ! <n>
Description	The [ESC] _ <1> command begins overscore print mode. All subsequent text, leading spaces, and trailing spaces are overscored. [ESC] _ <0> ends the mode.
Note 1	In EPOS mode, [ESC] ! <n> performs a similar function; however, near letter quality (NLQ) is not available.

Function	**Multi-line double-wide and double-high mode**
ASCII	[ESC] W <n>
Hexadecimal	1BH 57H <n>
Decimal	<27> <87> <n>
IPCL	&%FD {n = 1} &%FS {n = 0} &%FHA {n = 3} (Note: Single-wide, double-high mode is not available in IPCL mode.)
EPOS	[ESC] ! <n>

Description	The [ESC] W <n> command controls multi-line double-wide or double-high mode. Where n specifies the mode:
	
	n = 0 is standard single-wide and single-high;
	n = 1 begins double-wide;
	n = 2 begins double-high; and
	n = 3 begins double-wide double-high.

Note 1	The [ESC] W <n> command does not affect line spacing.
Note 2	In EPOS mode, [ESC] ! <n> performs a similar function; however, near letter quality (NLQ) is not available.

Where n Bits

76543210	Function
1-------	Underline
--1-----	Double-wide
---1----	Double-high
-------X	Font: 0 = draft; 1 = large draft

Function	**Set print style: double-wide, double-high, italic control**
ASCII	[ESC] [@ [EOT] [NUL] <k> [NUL] <n> <m>
Hexadecimal	1BH 5BH 40H 04H 00H <k> 00H <n> <m>
Decimal	<27> <91> <64> <04> <0> <K> <0> <n> <m>
IPCL	&%DH Double-high, double-wide, and double-space &%SH Single-high, single-wide, and single-space Also, see [ESC] W above.
Description	The [ESC] [@ [EOT] [NUL] <k> [NUL] <n> <m> command sets double-wide, double-high, and italic print mode.

Where k bits

k	76543210	
	----xxxx	Italic control
0	----0000	No change
1	----0001	Italics On
2	----0010	Italics Off

Where n bits

n	76543210	
	----0nnn	Height multiplier (Maximum 4)
0	----0000	No change
	xxxx----	Line spacing
0	0000----	No change

Where m bits

m	76543210	
	----0nnn	Width multiplier (Maximum 4)
0	----0000	No change

Note 1 The maximum height and width multiplier is four.

Function	**Begin underline**
ASCII	[ESC] - <n>
Hexadecimal	1BH 2DH 01H
Decimal	<27> <45> <n>
IPCL	&%MU (Begin)
IPCL	&%CU (End)
EPOS	[ESC] ! <n>
Description	The [ESC] - <1> command begins underline print mode. All subsequent text, leading spaces, and trailing spaces are underlined. [ESC] - <0> ends the mode.
Note 1	In EPOS mode, [ESC] ! <n> performs a similar function; however, near letter quality (NLQ) is not available.

Function	**Begin enhanced print**
ASCII	[ESC] G
Hexadecimal	1BH 47H
Decimal	<27> <71>
IPCL	&%ME
EPOS	[ESC] G <1>
Description	All subsequent text is printed in enhanced print mode (two passes with a vertical offset). Enhanced printing provides a deeper resolution of each character and may enhance multiple part forms printing.

Function	**End enhanced print mode**
ASCII	[ESC] H
Hexadecimal	1BH 48H
Decimal	<27> <72>
IPCL	&%CE
EPOS	[ESC] G <0>
Description	The [ESC] H command cancels enhanced print mode and returns to the currently selected font.

Function	**Begin emphasized print mode**
ASCII	[ESC] E
Hexadecimal	1BH 45H
Decimal	<27> <69>
IPCL	&%MM
EPOS	[ESC] E <1>
Description	The [ESC] E command begins emphasized print mode (one pass with horizontal offset). Emphasized print is bolder than normal print.

Function	**End emphasized print mode**
ASCII	[ESC] F
Hexadecimal	1BH 46H
Decimal	<27> <70>
IPCL	&%CM
EPOS	[ESC] E <0>
Description	The [ESC] F command cancels emphasized print mode.

Function	**Select superscript**
ASCII	[ESC] S <0>
Hexadecimal	1BH 53H 00H
Decimal	<27> <83> <0>
IPCL	&%SP
EPOS	none
Description	The [ESC] S <0> command selects superscript. The following characters are printed half size on the upper side of the print line.
Note 1	Superscript is not available in all print modes.

Function	**Select subscript**
ASCII	[ESC] S <1>
Hexadecimal	1BH 53H 01H
Decimal	<27> <83> <1>
IPCL	&%SB
EPOS	none
Description	The [ESC] S <1> command selects subscript. The following characters are printed half size on the bottom side of the print line.
Note	Subscript is not available in all print modes.

Function	**End superscript or subscript**
ASCII	[ESC] T
Hexadecimal	1BH 54H
Decimal	<27> <84>
IPCL	&%SE
EPOS	none
Description	The [ESC] T command ends superscript or subscript.

Function	**Begin italics**
ASCII	[ESC] % G
Hexadecimal	1BH 25H 47H
Decimal	<27> <37> <71>
IPCL	&%MI
EPOS	[ESC] 4
Description	The [ESC] % G command begins italic print mode.
Note	Italics are not available in all print modes.

Function	**End italics**
ASCII	[ESC] % H
Hexadecimal	1BH 25H 48H
Decimal	<27> <37> <72>
IPCL	&%CI
EPOS	[ESC] 5
Description	The [ESC] % H command ends italic print mode.

Print Rotation Commands

Rotated print capabilities are available. The print mode commands listed below rotate the print in any of three 90° orientations. In 90° and 270° rotated mode, the print data is first buffered by the printer, processed (rotated), and then printed in one of three fonts. Consequently, printing time is delayed. In 180° mode, the print is simply inverted and mirrored, and no delay occurs.

In rotated 90° and 270° mode, the printer can support up to 40 lines of rotated print with up to 128 characters per line. One single pass and two double pass fonts with emphasize and enhanced attributes are available.

In free format rotated 90° and 270° mode, the print length is determined by the length of the longest line entered. In line formatted mode, the line length is set not by the longest line entered but by the maximum line length specified by the set line length command.

Line spacing is controled by inserting [LF] (1/8 inch) or [ESC] J <n> (n/216 inch) commands in the rotated data.

Function	**Begin rotated print**
ASCII	[ESC] r <n>
Hexadecimal	1BH 72H <n>
Decimal	<27> <114> <n>
IPCL	&%RX
EPOS	[ESC] T <3>
Description	The [ESC] r <n> command starts rotated print mode where n defines the mode as follows:

Where: n = x bits,

`76543210`	Function
`----xx00`	End rotated print
`----xx01`	Rotate 90°
`----0010`	Rotate 180°
`----xx11`	Rotate 270°
`----x1xx`	Use line formatting

When n = 1 or 9, the print mode is rotated 90°. Print data is entered normally from left to right, top to bottom. When an end rotated print ([ESC] r <0>) command is received, the printer formats and prints the data. When n = 5 or 13, the print mode is rotated by 90° with formatting. The command differs from the [ESC] r <1> command because the line length is determined not by the longest line entered but by the line length set by the [ESC] s command. If input extends past the end of a line, it wraps around to the next line. When n = 3 or 11, the print mode is rotated 270° according to the currently stored format parameters. When n = 7 or 15, the print mode is rotated 270° according to the currently stored format parameters. The [ESC] r <7> command differs from the [ESC] r <3> command by spacing out the lines to the line length specified by the [ESC] s command. If input extends past the end of a line, it wraps around to the following line. When n = 2, the print mode is rotated 180°. All subsequent lines are rotated 180° and positioned at the opposite margin. All normal fonts and modes are available in 180° rotated mode. Format and font bits are ignored, and the command remains in effect until rotation is cancelled with an end rotated print ([ESC] r <0>) or a station select command.

Note 1 The last line of print must end with a line terminator before the end rotated command is issued. Any characters in the buffer that have not printed are printed un-rotated when a line terminator is received.

Note 2 In EPOS mode, the POSjet Printer does not fully implement page mode. The [ESC] T <n> command functions identically to normal mode, [ESC] r <n>, except the definition of <n> is different.

Note 3 Use the [ESC] I <n> command to select two-pass rotated font. The font selection must be made before the rotate command.

Note 4 Only enhanced and emphasized attributes are available for formatted, rotated print. These attributes are not available on a character basis. They affect all of the rotated text after the [ESC] r command. Enhanced and emphasized attributes must be set before the [ESC] r command is issued.

Rotated Print Summary

Function	**Begin 90° rotated print**
ASCII	[ESC] r <1>
Hexadecimal	1BH 72H 01H
Decimal	<27> <114> <1>
IPCL	&%R1
Function	**Begin 90° rotated print with line formatting**
ASCII	[ESC] r <5>
Hexadecimal	1BH 72H 05H
Decimal	<27> <114> <5>
IPCL	&%R5
Function	**Begin 270° rotated print**
ASCII	[ESC] r <3>
Hexadecimal	1BH 72H 03H
Decimal	<27> <114> <3>
IPCL	&%R3
Function	**Begin 270° rotated print with line formatting**
ASCII	[ESC] r <7>
Hexadecimal	1BH 72H 07H
Decimal	<27> <114> <7>
IPCL	&%R7
EPOS	[ESC] T <1>
Function	**Begin 90° rotated print with two pass font**
ASCII	[ESC] r <9>
Hexadecimal	1BH 72H 09H
Decimal	<27> <114> <2>
IPCL	&%R9 or &%RX09
EPOS	none
Function	**Begin 90° rotated print with two pass font and line formatting**
ASCII	[ESC] r <13>
Hexadecimal	1BH 72H 0BH
Decimal	<27> <114> <13>
IPCL	&%RX13
EPOS	none

Function	**Begin 270° rotated print with two pass font**
ASCII	[ESC] r <11>
Hexadecimal	1BH 72H 0BH
Decimal	<27> <114> <11>
IPCL	&%RX11
EPOS	none

Function	**Begin 270° rotated print with two pass font and line formatting**
ASCII	[ESC] r <15>
Hexadecimal	1BH 72H 0FH
Decimal	<27> <114> <15>
IPCL	&%RX15
EPOS	[ESC] T <1>

Function	**End rotated print**
ASCII	[ESC] r <0>
Hexadecimal	1BH 72H 00H
Decimal	<27> <114> <0>
IPCL	&%R0
EPOS	[ESC] { <0>
Description	The [ESC] r <0> command prints the contents of the rotated print buffer (when in 90° or 270° rotated mode) and returns to normal print orientation. In 180° rotated mode, the printer returns to normal mode. Characters in the print buffer that have not been printed are not printed.

Rotated Print Length Format

Function	**Set rotated print line length**
ASCII	[ESC] s <n>
Hexadecimal	1BH 73H <n>
Decimal	<27> <115> <n>
IPCL	&%RL <m_1> <m_2> <m_3>
EPOS	none
Description	The [ESC] s <n> command sets the print line length used in autoformat rotated print mode. The maximum number of characters per line is 128. The power on default line length is 80 characters. To determine the number of available print lines, divide 1760 by the number of characters per line and round down to the nearest whole number. There must be a minimum of 80 characters per line, which allows up to 22 lines of print. A value less than 80 does not allow additional print lines. Values greater than 80 reduce the number of lines.

POSjet® 1500 Page Mode

The POSjet® 1500 supports two operational modes, standard and page mode. In standard mode, as a line of text is received it is buffered and printed when the line feed is received. In page mode the printer waits for a complete "Page" (a number of lines) to be received before printing the complete page. The advantage of page mode is that text and/or graphics can be placed anywhere on the Page, in any order, and in any of 4 orientations.

How to use page mode

Page mode requires three phases to operate correctly.

1) Page size definition.
2) Page definition (Placing data on the page)
3) Printing the page.

Setting the Page Size

Before you can start a page definition, you must define the page size.

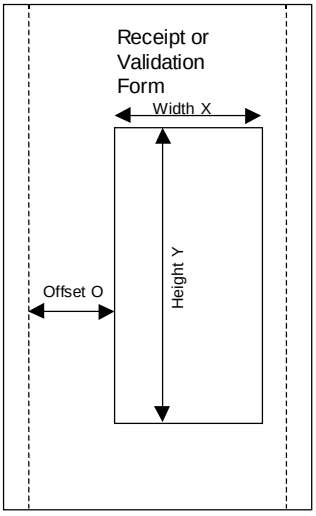

Figure 35 Page Definition

The height Y, width X and an offset O define the page. The height is defined at a resolution of 192 dots per inch. The width and offset are defined at a resolution of 208 dots per inch.

The page size is limited by the available memory in the POSjet® 1500's page buffer. This buffer can accommodate 411,840 dots. The Maximum width that can be defined is 520 dots or 2.5 inches. The Maximum height that can be defined is 1176 dots or 6.125 inches. Note that the Maximum Width and Height cannot be used together. The following table can be used to help setup the page sizes.

Width X	2.5” Max 520 dots	2.5” Max 520 dots	2.25” 468 dots	2.0” 416 dots	1.75” 364 dots	0.5” Min. 96 Dots
Offset O	0” 0 dots	0” 0 dots	0.25” 52 dots	0.5” 104 dots	0.75” 156 dots	2.0” 416 dots
Height[18] Y	0.5” Min. 96	4.125” 792 dots	4.5 864 dots	5.1 984 dots	5.875 Max 1128 dots	6.125 Max 1176 dots

In inches Height = 10.3125/Width
Width = 10.3125/Height

In dots Height = 411840/Width
Width = 411840/Height

Table 38 Max/Min Page Mode Height, Width, and Offsets

Note: If an image can not be set smaller than 0.5” or 96 dots in height or width. The Image will be adjusted up to meet the minimum size requirements..

Page Definition

Before you start the page definition you must set the page size. (See the [ESC]u command) Once the page size is defined, the [ESC]t command will start page definition and define the initial orientation. An [ESC]t command during page definition will change the orientation and reset the entry location back to the top left corner of that orientation.

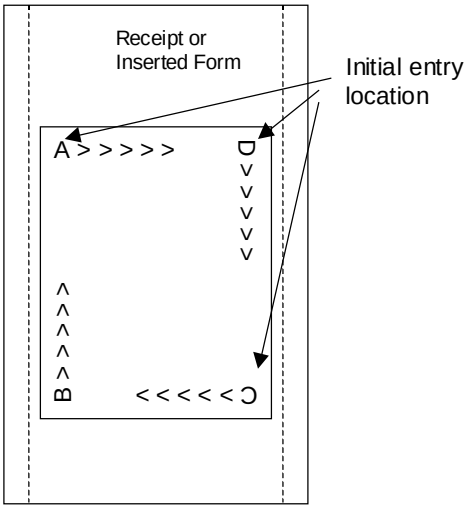

Figure 36 Page Mode entry Orientations

Embedding Station Selects during Page Definition

The POSjet® 1500 supports station select and form loading commands during the page mode definition. The station select commands will be stored and delayed until after the definition is complete and the printing process begins. The advantage of this is that it allows the page to be sent to the printer and processed while the operator is preparing to insert a form.

This station select process follows rules based on the order that the station select commands are presented during the page definition.

[18] The image array height must be allocated in multiples of 12. Therefore the height specified will be rounded (up if there is room or down if not) to the nearest multiple of 12.

1) If a Receipt station select precedes a validation select command the validation select command will be ignored. If a form is in the printer it will be ejected before printing starts.
2) If a Validation select command precedes a receipt station select command, the Validation select command will be processed before the page is printed and the receipt station select will be processed after the page is printed (ejecting the form).
3) If a form is already loaded into the printer and a Validation select command is in the definition, the form will not be reloaded, however, the validation select command must be present to prevent the form from be ejected and the receipt station selected.
4) If a load form to the top of form ([ESC]m) is issued, before any validation select command, that might be present, it is processed after the validation select command.
5) If a load form to the top of form ([ESC]m) is issued and validation is not selected, it is ignored.
6) If an auto-cut command is in the page definition it is ignored if any validation operation is attempted.

If you print the page with "print and reenter page mode" command [ESC][FF], you must re-issue the station select commands for the next print operation.

You may place the station select commands anywhere in the definition, however, they must be in the proper order.

Auto-cutter and Page mode

You may embed an auto-cutter command with in a page definition provided the page will be printed on the receipt station. The auto-cut command may be placed anywhere in the page definition, however, it will be processed after the page is printed, To prevent the cut from occurring in the page, it will be proceeded with a feed that will place the end of the page about 0.125 inches above the auto-cut position.

Mechanism commands in page mode

In general mechanism commands received during page mode will be processed if the result will not effect the printed result. That is the bell and cash drawer commands will be processed as they are received.

Stopping Page mode definition.

Several things will stop a page mode definition.

1) [ESC]@ Printer initialize command.
2) Real time reset request [ENQ]<10>
3) Parallel port INIT request.
4) Turning the printer off.

Printing the page

The [FF] or [ESC][FF] command starts the printing process.

Printing starts at the current left margin and at the current paper position. The complete page definition is printed including any blank information at the bottom of the page.

If the [FF] command is used to print the page, the memory used to store the page image is not maintained and is released to be used by other functions.

If the [ESC][FF] command is used, the page is printed and page mode is reentered. The advantage of this mode is that you can print a page, add data to it and print it again. Any station select commands embedded in the page definition must be reissued after the print process. This allows one copy of the page to be printed on an inserted form and a duplicate printed on the receipt.

Function	**Select Page Mode**	**Page Mode**
ASCII	[ESC] t<x>	
Hexadecimal	1BH 74H<x>	
Decimal	<27><116><x>	
IPCL	&%PM	
EPOS	[ESC] L	

Description This command activates Page mode and sets the orientation.

This command may also be issued during page definition. When issued in page mode it resets the orientation and entry position but does not cause the currently defined image to be erased or printed.

You must previously have set the page size (See the [ESC]u command).

Where x = 0 for standard orientation (Direction A).
x = 1 for 270° Rotation (Direction B)
x = 2 for 180° Rotation (Direction C)
x = 3 for 90° Rotation (Direction D)

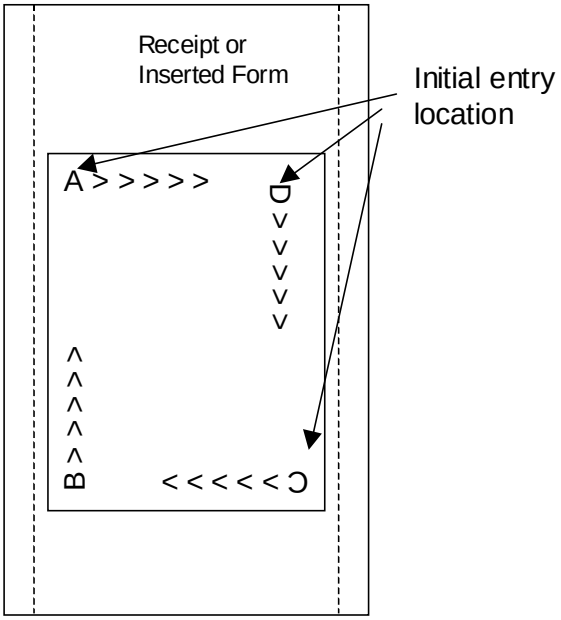

Note: This command saves the current right and left margin and sets them to the maximum values for the orientation currently defined.

Note: During page mode definition almost all printer commands are active. The following table lists the exceptions:

Command	Active	Action
Cash drawer commands	Yes	Immediate action
Bell Command	Yes	Immediate action
Auto Cut commands	Delayed	The printer will perform a feed to cut and then operate the auto cutter after the page is printed. The cut command may be anywhere in the definition. If the page is printed twice, the Auto cut command must be reissued after the first print to generate additional cuts.
Electronic Journal Station Select	No	This command is like a station select and is not active. You cannot store page mode images in the electronic journal. A page mode command in journal station mode will exit journal mode.
Electronic Journal Entries	Yes	You can make journal entries as part of a page description. They are saved as text and not part of the page.
Station selects and Form Load commands	Delayed	Any Validation Select and Check load commands found in the page definition, are delayed until the page is printed. If the page is printed more than once, the Form load commands must be reissued. See the section on embedding station select commands in page mode below.
Status Requests	Yes	The status is returned during definition.
Printer Initialize command	Yes	Cancels Page Mode Definition and returns the printer to standard mode.
Set Top of form	No	You must set the top of form outside of page mode. The form position is maintained after the page is printed.
Vertical tab	No	The definition of a vertical tab is ambiguous in page mode and is ignored.
Macro Definitions	No	You can not define or delete a macro while in page mode. You can, however, invoke a macro or stored graphic. You can not enter page mode while in a macro definition.

Function **Set Page Mode Page Size**

ASCII [ESC] u <O_L><O_H><X_L><X_H><Y_L><Y_H>
Hexadecimal 1BH 75H <O_L><O_H><X_L><X_H><Y_L><Y_H>
Decimal <27><117> <O_L><O_H><X_L><X_H><Y_L><Y_H>
IPCL &%PS
EPOS [ESC] W

Description This sets the page size and position for data entry while in page mode. It is not valid during page definition and must be issued before page definition starts..

The offset O is defined from the right edge of the print zone and is O_h * 256 + O_l dots at 208 dots per inch. The Width is X_h * 256 + X_l dots at 208 dots per inch. The sum on O + X must not be greater than 520 dots or 2.5 inches. The height is defined by Y_h * 256 + Y_l dots at 192 dots per inch.

If the values specified by this command are out of range, the command will create the largest size possible page definition with the X direction taking priority. If either X or Y is specified as 0, the maxim value for that direction will be calculated and used. Specifying 0 for all the parameters will restore the printer to the default of 520 in the X direction and 792 in the Y with no offset.

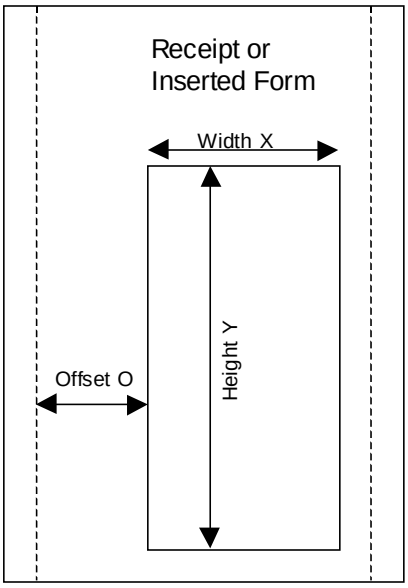

Note 1: O + X must be less than 520.

Note 2: The value of X * Y must be less than or equal to 411840.

Note 3: Y is internally rounded up to the nearest multiple of 12.
For example if you want the height to be 3.1 inches, B = 3.1*192 or 595.2 dots. 595.2 will be rounded up to 600 or 3.125 inches. If rounding up results in X * Y being greater than 411840 dots, the value of Y will be reduced by 12 to 588 or 3.06 inches.

Function	**Set Page Mode Entry Position**
ASCII	[ESC] o <X_L><X_H><Y_L><Y_H>
Hexadecimal	1BH 6FH <X_L><X_H><Y_L><Y_H>
Decimal	<27><111> <X_L><X_H><Y_L><Y_H>
IPCL	&%PY
EPOS	[ESC] W
Description	This command positions the horizontal and vertical entry position to anywhere on the page. It is only valid in page mode. If the values specified are beyond the page boundary, the command is ignored. (X and Y refer to the current active orientation specified by the [ESC]t command and are not same as the page definition of X and Y. The X position is in dots and the resolution depends on the current orientation. $X = X_h * 256 + X_l$ dots from the left The Y position is in dots and the resolution depends on the current orientation. $Y = Y_h * 256 + Y_l$ dots from the top
Note:	You can also use the [ESC]J, [ESC]M. [ESC]d and [ESC]e commands to position the print on the page.
Note:	This command does not set the right margin. Use the set the margins command to set the right and left margin. (Any margins set while in page mode will be restored to the original values when the printer returns to normal mode.)

Function	**Exit Page Mode**
ASCII	[FF]
Hexadecimal	0CH
Decimal	<12>
IPCL	&%FF
EPOS	[FF]
Description	This command exits page mode definition and starts the print process. If the printer is not in page mode this command is treated as a normal form feed command.
Note:	When page mode finishes printing the left and right margins are restored to the values before the select page mode command. All other format changes are preserved.

Function	**Print Page and stay in Page Mode**
ASCII	[ESC][FF]
Hexadecimal	1BH, 0CH
Decimal	<27><12>
IPCL	&%PP
EPOS	[FF]
Description	This command prints the page as currently defined and reenters page mode. The page pointers are not effected. This can be used to print one copy of a page, modify it and then print a second. You must use the “Exit Page Mode” command or an initialize printer [ESC]@ command to return to normal operation.

Check Printing

A typical personal check is 2.75 by 6 inches. The 2 by 5.1-inch page mode size is ideal for check printing. You can set the Page Position so as to print the "Date, Pay to the Order Of", and the amount fields easily. The following example will print the face of a typical personal check. You can add logo's or graphics as needed.

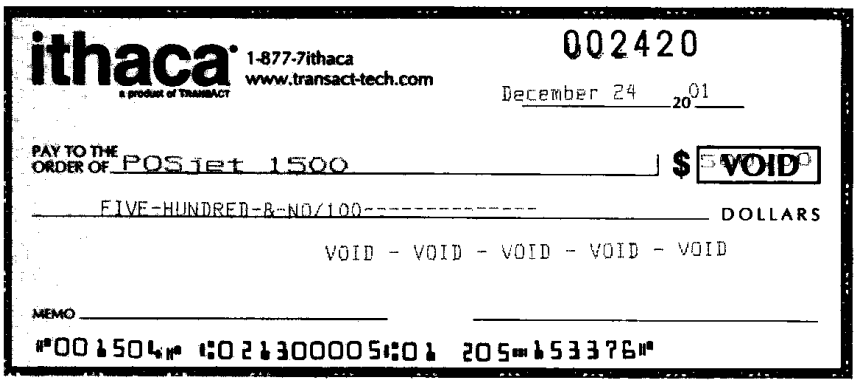


```
[esc]j                                      `Select Validation Mode
[esc]m                                      `Load the check
[esc]I<1>                                   `Set font and line spacing
[esc]u<90><0><114><1><211><3>               `Set Page size and offset
[esc][P<12>                                 `Set 12 CPI
[esc]t<3>                                   `Start Page definition
[esc]J<02>                                  `Position the Date
                                   December 24 01[cr][esc]J<112>
[esc][P<15>[so]                             `Select 15 CPI Double Wide
 POSjet 1500                  [esc]c<1>500.00[cr][esc]J<70>
[esc]c<0>
[esc][P<12>                                 `Select 12 CPI
FIVE-HUNDRED-&-NO/100--------------[cr]
[ff]                                        `Print the check
[esc]I<0>                                   `Reset any print defaults
[esc][P<17>
[esc]0
[esc]f                                      `Return to receipt mode
```

Note: At this time it is not possible to print the MICR fields with the POSjet® 1500 printer. The ink used in the printer is not magnetic.

POSjet®1500 Graphics

The POSjet®1500 Printer conforms to the basic definition of IBM all-points-addressable (APA) graphic commands. It is not designed to print large quantities of graphical data. The printer only prints graphics that are 2.5 inches wide. At this time, there is not a graphics mode for Epson.

The POSjet®1500 Printer always prints in one of the native resolutions of 104 x 96, 208 x 96, 104 x 192, or 208 x 192 dpi. To provide compatibility with the standard IBM APA resolutions, the printer internally modifies the graphics to print as expected. The printer converts the vertical resolution by altering the [ESC] J command (which is typically used for vertical spacing) and adjusting it so that horizontal passes touch as expected. The requested horizontal resolution is converted by data scaling. Because the vertical dpi of the printer is always greater, the resulting APA graphics printed on the POSjet®1500 Printer are slightly smaller than the same graphic printed on an impact printer. All of this is done transparently to the application; however, loss of resolution may result in some modes. If desired the [ESC] * <m> command can be used to select the native resolution.

Note 1 If the POSjet®1500 Printer is used with programs that convert text to graphics, the printer is slower than if the printer is sent ASCII text. The POSjet®1500 Printer is supported by a Windows' print driver that allows applications to select supported fonts.

Note 2 Generally, the horizontal graphic commands provide faster print than the APA graphic commands.

Standard APA Graphics

Function	**Print single-density graphics (60h x 72v dpi)**
ASCII	[ESC] K <n_1> <n_2>
Hexadecimal	1BH 4BH <n_1> <n_2>
Decimal	<27> <75> <n_1> <n_2>
IPCL	none
Description	The [ESC] K <n_1> <n_2> command prints <n_1> + 256 * <n_2> bytes of single-density graphics (60 dpi).

Function	**Print half-speed double-density graphics (120h x 72v dpi)**
ASCII	[ESC] L <n_1> <n_2>
Hexadecimal	1BH 4CH <n_1> <n_2>
Decimal	<27> <76> <n_1> <n_2>
IPCL	none
Description	The [ESC] L <n_1> <n_2> command prints <n_1> + 256 * <n_2> bytes of double-density graphics (120 dpi) at half speed allowing full and half dots to be printed.

Function	**Print full-speed double-density graphics (120h x 72v dpi)**
ASCII	[ESC] Y <n_1> <n_2>
Hexadecimal	1BH 59H <n_1> <n_2>
Decimal	<27> <89> <n_1> <n_2>
IPCL	none
Description	The [ESC] Y <n_1> <n_2> command prints <n_1> + 256 * <n_2> bytes of double-density graphics (120 dpi) at full speed with no consecutive dots. (The mode is generally used to print 120h by 144v dpi resolutions in two passes).

Function	**Print quad-density graphics (240h x 72v dpi)**
ASCII	[ESC] Z <n_1> <n_2>
Hexadecimal	1BH 5AH <n_1> <n_2>
Decimal	<27> <90> <n_1> <n_2>
IPCL	none
Description	The [ESC] Z <n_1> <n_2> command prints <n_1> + 256 * <n_2> bytes of quad-density graphics (240 dpi) at half speed with no consecutive dots. (The mode is generally used to print 240h by 144v dpi resolutions in two passes).

Extended APA Graphics

Function	**Print graphics in mode <m> (60h/ 120h/ 240h x 72v dpi)**
ASCII	[ESC] * <m> <n_1> <n_2>
Hexadecimal	1BH 2AH <m> <n_1> <n_2>
Decimal	<27> <42> <m> <n_1> <n_2>
IPCL	none
Description	The [ESC] * <m> <n_1> <n_2> command selects one of three graphic modes as specified by <m>.

Where <m>	0	60 dpi	Full speed	8-bit slices
	1	120 dpi	Half speed	8-bit slices
	2	120 dpi	Full speed	8-bit slices
	3	240 dpi	Full speed	8-bit slices
	4	80 dpi	Full speed	8-bit slices
	5	72 dpi	Full speed	8-bit slices
	6	90 dpi	Full speed	8-bit slices
	7	144 dpi	Full speed	8-bit slices
	8,9	Not supported		
	10	104 x 96 dpi		1 horizontal 1 vertical pass
	11	208 x 96 dpi		2 horizontal 1 vertical pass
	12	104 x 192 dpi		1 horizontal 2 vertical passes
	13	208 x 192 dpi		2 horizontal 2 vertical passes
	15,16	Not supported		

Function	**Reassign graphic mode**
ASCII	[ESC] ? <m> <n>
Hexadecimal	1BH 3FH <m> <n>
Decimal	<27> <63> <m> <n>
IPCL	none
Description	The [ESC] ? <m> <n> command reassigns graphic mode <m> to resolution <n>. Possible values for <m> are K, L, Y, or Z. Resolutions, <n>, are zero to seven as follows:

Where <m>

0	60 dpi	Full speed	8-bit slices	Default for K
1	120 dpi	Half speed	8-bit slices	Default for L
2	120 dpi	Full speed	8-bit slices	Default for Y
3	240 dpi	Full speed	8-bit slices	Default for Z
4	80 dpi	Full speed	8-bit slices	
5	72 dpi	Full speed	8-bit slices	
6	90 dpi	Full speed	8-bit slices	
7	144 dpi	Full speed	8-bit slices	
10	104 x 96 dpi		1 horizontal, 1 vertical pass	
11	208 x 96 dpi		2 horizontal, 1 vertical pass	
12	104 x 192 dpi		1 horizontal, 2 vertical passes	
13	208 x 192 dpi		2 horizontal, 2 vertical passes	

Note 1 Modes 11 through 13 are designed to support horizontal graphics and not intended for APA graphics.

Function	**Select unidirectional print**
ASCII	[ESC] U <1>
Hexadecimal	1BH 55H 01H
Decimal	<27> <85> <1>
IPCL	&%GU
EPOS	ESC] U <1>
Description	The [ESC] U <1> command prints all data in unidirectional print mode to improve line to line registration for graphical data.
Note 1	Unidirectional print should be canceled before normal text is printed. Print time is slowed if it is not canceled.

Function	**Select bi-directional print**
ASCII	[ESC] U <0>
Hexadecimal	1BH 55H 00H
Decimal	<27> <85> <0>
IPCL	&%GB
EPOS	[ESC] U <0>
Description	The [ESC] U <0> command prints all data in bi-directional, logic-seeking print mode.

Horizontal Graphics (Color Graphics)

The POSjet®1500 Printer supports graphics sent as horizontal scan lines. Individual scan lines of graphic data are sent to the printer one line at a time. Although the POSjet®1500 Printer only supports two colors, the horizontal graphic command interface gives full color support for printer graphics. Full color support is provided to establish a full color standard for future printers. Color data is sent in one of three color planes. Typically, a red plane or scan line is sent, then green and blue. The sequence of lines defines one row of dots that is printed on the paper.

The horizontal graphic commands do not include resolution information. Therefore, only once before sending graphics data, set the graphics resolution by sending the ESC * command with a zero length (no data). The graphic resolution sets the internal graphic mode of the printer. The printer stays in graphic mode until it is changed by another command. Note: the bar code generation and other graphic commands change graphics mode. The format of the horizontal graphic command follows.

Function	**Process horizontal graphics data**
ASCII	[ESC] h <color> <length> <format> <data>
Hexadecimal	1BH 68H
Decimal	<27> <104>
IPCL	None
EPOS	None
Description	The [ESC] h <color> <length> <format> <data> command processes horizontal graphic data. Where <color> is a byte that specifies the color of the data being sent. <color> = 0 Use Previously Selected Color 1 Red 2 Green 4 Blue 16 Single Color (Black/White)
Note 1	Red, green, and blue pixels set to one at the same location result in white dot. While red, green, and blue pixels set to zero form a black dot. For black print, one represents a black dot and zero represents a white dot.
Note 2	More than one color may be set at a time. Setting the color to six would set green and blue simultaneously. Where <length> is a byte specifying the length of the data including the format byte. <length> = 0 to 254 (255 is reserved for future use.) Where <format> is a byte specifying the format of the graphics data. <format> = 0 for raw data 1 for bit wise RLE compression 8 for byte wise RLE compression 254 for difference compression 255 for same as previous scan line data
Where <data>	is the data bytes that define the graphics to be printed.

Function	**Set horizontal graphic mode**
ASCII	[ESC] * <m> <0> <0>
Hexadecimal	1BH 2AH <m> <0> <0>
Decimal	<27> <42> <m> <0> <0>
IPCL	none
Description	The [ESC] * <m> <0> <0> command selects one of the three graphic modes specified by <m>. The two bytes after the mode must be zero.

Where <m>

0,2,3,4,5,6,7	Standard Graphic Modes (See above.)	
8,9	Not supported	
10	104 x 96 dpi	1 horizontal, 1 vertical pass
11	208 x 96 dpi	2 horizontal, 1 vertical pass
12	104 x 192 dpi	1 horizontal, 2 vertical passes
13	208 x 192 dpi	2 horizontal, 2 vertical passes
14,15,16	Not supported	

Note 1 Only modes 10 thorough 13 should be selected for horizontal graphics.

Example

Command	***Comment***
ESC * <10> <0> <0>	Set resolution to 100 x 96 dpi.
ESC h <1> <9> <0> <eight data bytes>	Send 8-bytes red pixels.
ESC h <2> <9> <0> <eight data bytes>	Send 8-bytes green pixels.
ESC h <3> <9> <0> <eight data bytes>	Send 8-bytes blue pixels.
LF	Send line feed to force print of any buffered data not yet printed.

Note 2 Graphic data is committed to paper when more than 12 dot rows have been transmitted to the printer. If less than 12 dot rows have been sent, they are not printed until the line is terminated (i.e. a line feed command is sent). To make graphics faster to send and smaller to store, several algorithms are included with the graphic command to compress the data.

Graphics Compression

Although the printer compression algorithms are documented, it is recommended that our Windows' printer driver be used to generate a graphic image. Our Windows' printer driver selects the best compression method to use on a scan line by scan line basis. The print driver can be directed to print to file, creating a .prn file. When creating a .prn file, it is recommended that the Start/End Doc settings be cleared in the Start/End Doc tab of the printer properties page. After the .prn file is created, it can be read and sent to the printer by the host application.

Bit wise RLE

In bit wise RLE compression, the Most Significant Bit (MSB) Compression of each data byte denotes if the compressed data represents one or zero bits. Bits zero through six indicate how many bits are represented as a one or zero. A 34 Hex (34H) represents 34H bits set to zero. A 97H represents 17H bits set to one. ESC h <1> <5> <1> <34H> <97H> <8fH> <09H>

In byte wise RLE compression, data is represented in byte Compression pairs. The first byte is a count, and the second is the graphics data. The graphics data byte is repeated the number of times represented by the count byte. ESC h <1> <5> <8> <09H> <ffH> <02H> <55H> Where <09H> <ffH> means repeat ffH nine times and <02H> <55H> means repeat 55H two times.

In difference compression, data is represented in byte pairs. In compression, the first byte is an index into the byte stream, as it would exist if sent in an uncompressed format. The second byte is the data that is different in the new scan line data. Think of compression mode as, "The scan line is the same as the previous except for the byte at a specific position." ESC h <1> <5> <254> <03H> <d5H> <0bH> <51H> Where <03H> <d5H> means use the previously transmitted scan line data but change byte 3 to a d5H and change byte 11 (0bH) to a 51H.

Same-As-Previous Compression

In same-as-previous compression, the command does not contain any graphics data. The command specifies that the printer is to use the previous scan line data for the current scan line. ESC h <1> <1> <255>.

User Store (Graphic Save)

The POSjet®1500 Printer maintains a 16K (16384 bytes) section of flash memory and up to 192K of extended flash memory to save user information. The information can be either macros or user-defined characters. These groups of data are indexed by name and may be called up at any time after they are stored. See the sections on Macros and User-defined Characters for definitions of these functions.

To allow the host application to maintain these groups of data, a series of user-store maintenance commands are available. As referenced earlier in this manual, the user can define a limited number of custom characters and define a macro. These character/macro definitions can also be saved in user store. However, only one character definition and one macro can be active at any time. One macro and one user-defined character definition can be flagged to load and run at startup. If a flag is set, the printer will automatically process the macro and/or load the user-defined character set at initialization.

Because user store is intended to be loaded only a few times and then printed as part of normal operation, the programmer must take some care during the definition phase. The programmer must assume the responsibility to assure the 16K buffer size is not exceeded. User store can save macros and user-defined character sets.

When the basic user store is full, it can be moved to extended user store. Individual items in the extended user store can not be erased. The entire extended user store must be erased all at once. You may place two items in user store with the same name and the last defined item will be used.

Defining Macros

Macros can be defined two ways. The first is by using the begin and end named macro commands. These commands start the recording process and automatically save the macro when it is complete. The macro data is not processed as it is sent to the printer.

Function	**Begin named macro record**
ASCII	[ESC] [US] b <Name..> <0>Then send the data to be recorded. The printer does not process the data. The terminating <0> may be redefined. See [ESC] [EM]T<n> or &%UT>n> on page 175.
Function	**End name macro record**
ASCII	[ESC] [US] e <Name..> <0> The second way to define macros is to use [ESC] g commands to define the macro and then the save macro data command to save the data. The terminating <0> may be redefined. See [ESC] [EM]T<n> or &%UT>n> on page 175.
Function	**Start macro record**
ASCII	[ESC] g <1>Then send the data to be recorded. (The data is processed and printed).
Function	**Stop macro record**
ASCII	[ESC] g <2>Then save the macro.
Function	**Save macro data**
ASCII	[ESC] [US] m <Name..>Saving User-defined Characters. To save user-defined characters, first define the character set.

Function	**Define user-defined characters**
ASCII	[ESC] = <y> <c_1> <c_2> [x_1 d_1 … d(y *x* x_1)] … [xk d_1 … d(y *x* xk)] Second, save the definition in the nonvolatile flash memory with the appropriate command. Save the definition. Note the "Save user-defined characters" command saves all three character definitions.
Function	**Save user-defined characters**
ASCII	[ESC] [US] c <Name..> <0> Third, load the character set or load and run the macro. To restore the character definitions, issue a load item command with the name of the character set to be loaded. The terminating <0> may be redefined. See [ESC] [EM]T<n> or &%UT>n> on page 175.
Function	**Load item from user store**
ASCII	[ESC] [US] l <Name..> <0> If the item referenced is a user-defined character set, it is loaded into the current definition. If it is a macro, it is loaded into the macro buffer. It is not processed or printed. To help maintain the user-store area, the following commands can be used. The terminating <0> may be redefined. See [ESC] [EM]T<n> or &%UT>n> on page 175.
Function	**Flag as a start-up macro**
ASCII	[ESC] [US] s <Name..> <0> The [ESC] [US] s <Name..> <0> command flags the referenced item to be processed at startup. No more than one user character definition and user data item may be flagged. The terminating <0> may be redefined. See [ESC] [EM]T<n> or &%UT>n> on page 175.
Function	**Remove item from user store**
ASCII	[ESC] [US] e <Name..> <0> The [ESC] [US] e <Name..> <0> command removes an item from user store and frees up its space. The terminating <0> may be redefined. See [ESC] [EM]T<n> or &%UT>n> on page 175.
Function	**Flush information from user store**
ASCII **Or**	[ESC] [US] f ALL <0> [ESC] [US] f EXT <0> Extended User Store.
Description	The [ESC] [US] f ALL <0> command clears all of the information to the user store and frees the data space. The terminating <0> may be redefined. See [ESC] [EM]T<n> or &%UT>n> on page 175.

Function	**Report on user store**
ASCII	ESC] [US] q <0>
Description	The [ESC] [US] q <0> prints or returns information about the contents of and available space in user store.
Note 1	A configuration option is available that locks the user-store data. The configuration option prevents the occurrence of new user-store data operation until the lock is manually reset and accidental deletion of the saved information. The user-defined character buffer and/or user data buffer may be redefined and used but cannot be stored. The terminating <0> may be redefined. See [ESC] [EM]T<n> or &%UT>n> on page 175.

User-Store Commands

Function	**Begin named macro record**
ASCII	[ESC] [US] b <Name..> <0>
Hexadecimal	1BH 1FH 62H
Decimal	<27> <31> <98>
IPCL	&%UB <Name..> <0>
EPOS	none
Description	The [ESC] [US] b <Name..> <0> command erases the current macro, initializes the macro buffer structure, and redirects the following data to the macro buffer. It uses the <Name..> field as a reference. If the name already exists in the flash user store, the command is ignored. The command must be followed by the "End name macro record" command with the same name. If the data that follows is larger than the macro buffer (about 16K), the macro definition is terminated without saving any data. The terminating <0> may be redefined. See [ESC] [EM]T<n> or &%UT>n> on page 175.

Function	**End named macro record**
ASCII	[ESC] [US] e <Name..> <0>
Hexadecimal	1BH 1FH 65H
Decimal	<27> <31> <101>
IPCL	&%UG <Name..> <0>
EPOS	none
Description	The [ESC] [US] e <Name..> <0> command ends the macro record operation and saves the macro to flash. It uses the <Name..> field to verify the command end and must match the "Begin named macro record" command. If the name already exists in the flash user store or the macro memory is exceeded, the command is valid, and the <Name..> field prints. If there is not enough room in the flash user store for the macro, the save is not performed, but the macro buffer is valid. The terminating <0> may be redefined. See [ESC] [EM]T<n> or &%UT>n> on page 175.

Function	**Save macro data in user store**
ASCII	[ESC] [US] m <Name..> <0>
Hexadecimal	1BH 1FH 6DH
Decimal	<27> <31> <109>
IPCL	&%UM <Name..> <0>
EPOS	[GS] -…<Name..> <0> is from one to 15 characters and must be null terminated.
Description	The [ESC] [US] m <Name..> <0> command saves the current macro buffer structure into the flash user-store area. It uses the <Name..> field as a reference name. If the name already exists in the flash user store, the command does not store the data. The terminating <0> may be redefined. See [ESC] [EM]T<n> or &%UT>n> on page 175.

Function	**Save user-defined characters**
ASCII	[ESC] [US] c <Name..> <0>
Hexadecimal	1BH 1FH 63H
Decimal	<27> <31> <99>
IPCL	&%UC <Name..><0>
EPOS	[GS] 6<Name..> <0> is from one to 15 characters and must be null terminated.
Description	The [ESC] [US] c <Name..> <0> command saves the current user-defined character structure in the flash user-save storage area. It uses the<Name..> field as a reference. If the name already exists in the flash user store, the command will not store the data. The terminating <0> may be redefined. See [ESC] [EM]T<n> or &%UT>n> on page 175.

Function	**Load item from user store**
ASCII	[ESC] [US] l <Name..> <0>
Hexadecimal	1BH 1FH 6CH
Decimal	<27> <31> <108>
IPCL	&%UL <Name..> <0>
EPOS	[GS] 0<Name..> <0> is from one to 15 characters and must be null terminated.
Description	The [ESC] [US] l <Name..> <0> command loads the referenced item into the appropriate structure. If the item referenced is a user-defined character set, it is loaded into the current user-character definition, which does not affect the active state of user-defined characters. If it is a macro, it is loaded into the macro buffer, but it is not inserted into the data stream. [ESC] g <0> inserts the macro buffer into the data stream. If the named item does not exist, the command does nothing. The terminating <0> may be redefined. See [ESC] [EM]T<n> or &%UT>n> on page 175.

Function	**Run macro data from user store**
ASCII	[ESC] [US] r <Name..> <0>
Hexadecimal	1BH 1FH 72H
Decimal	<27> <31> <114>
IPCL	&%UR <Name..> <0>
EPOS	[GS] 0<Name..> <0> is from one to 15 characters and must be null terminated.
Description	The [ESC] [US] r <Name..> <0> command loads the referenced macro into the macro buffer. The macro buffer is then inserted into the data stream. If the named item does not exist or is not a macro, nothing happens. The terminating <0> may be redefined. See [ESC] [EM]T<n> or &%UT>n> on page 175.

Function	**Flag item as a start-up macro**
ASCII	[ESC] [US] s <Name..> <0>
Hexadecimal	1BH 1FH 73H
Decimal	<27> <31> <115>
IPCL	&%US <Name..> <0>
EPOS	[GS] 0<Name..> <0> is from one to 15 characters and must be null terminated.
Description	The [ESC] [US] s <Name..> <0> command flags the referenced item to `be processed at startup. Only one user character definition and one macro may be flagged to run at startup.
Note	If a character definition is loaded at startup, it is automatically made active. The terminating <0> may be redefined. See [ESC] [EM]T<n> or &%UT>n> on page175

Function	**Delete item from user store**
ASCII	[ESC] [US] d <Name..> <0>
Hexadecimal	1BH 1FH 64H
Decimal	<27> <31> <100>
IPCL	&%UD <Name..> <0>
EPOS	[GS] 1 <Name..> <0> is from one to 15 characters and must be null terminated.
Description	The [ESC] [US] d <Name..> <0> command removes an item from user store and frees up space. If the item does not exist, the command does nothing. The terminating <0> may be redefined. See [ESC] [EM]T<n> or &%UT>n> on page 175.

Function	**Transfer all items from user store to extended user store.**
ASCII	[ESC] [US] t <0>
Hexadecimal	1BH 1FH 74H
Decimal	<27> <31> <116>
IPCL	&%UX <0>
EPOS	None
Description	This command transfers the information in the base 16K user store to the extended user store. The base user store is erased if the transfer was successful.

Function	**Flush information from user store or extended user store**	
ASCII	[ESC] [US] f ALL <0>	User Store.
Or	[ESC] [US] f EXT <0>	Extended User Store.
Hexadecimal	1BH 1FH 66H 00H	
Decimal	<27> <31> <102> <0>	
IPCL	&%UF	
EPOS	[GS] 5	
Description	The [ESC] [US] f ALL <0> command clears all entries in user store and frees the data space. It must have the name, “ALL” (in uppercase) attached. If “EXT” is substituted for “ALL”, extended user store (If any) is cleared. The terminating <0> may be redefined. See [ESC] [EM]T<n> or &%UT>n> on page 175.	

Function	**Report on user store**	
ASCII	[ESC] [US] q <0>	Print a user store report
Or	[ESC] [US] ? <0>	Return a formatted user store report
Hexadecimal	1BH 1FH 71H	
Decimal	<27> <31> <113>	
IPCL	&%UQ <Name..> <0>	
EPOS	[GS] 3	

Description	The [ESC] [US] q <Name..> <0> command prints a status report. The file name is ignored and may be omitted. The NUL must be present. The intention of the command is to aid in macro development.
Note 1	The report is also printed as part of the configuration report. The terminating <0> may be redefined. See [ESC] [EM]T<n> or &%UT>n> on page 175.

Function	**Redefine User Store Termination Character**
ASCII	[ESC] [EM] T <n>
Hexadecimal	1BH 19H 54H <n>
Decimal	<27> <25> <84> <n>
IPCL	&%UT <n>
EPOS	None
Description	This command allows the terminator used to signal the end of the name field in User Store commands to be modified. The value of <n> is used (in addition to the <0>) for the terminator. The value of n may be from 0 to 255.
Example	If &%UT% were sent to the printer the User Store command to run macro "Demo" would be &%URDemo%.

User Macros

The user macro feature works by inserting the macro data buffer into the printer data stream when the print user-store data command is encountered.

Macros can be any data normally sent to the printer including graphics. (Note: user-store maintenance and inquire commands may not be included in the macro definitions.) The printer stores macro data in a RAM-based storage buffer as it is received and processed. The storage buffer may then be saved to a flash-based user store or inserted into the print data stream. If a macro is recalled from user store, it is expanded into the macro buffer and replaces whatever is currently there.

Programming Considerations

The flash (nonvolatile) memory has a limited number of write cycle operations. Consequently, the number of saves should be limited. The buffer should not be saved on a transaction by transaction basis. Once a day should be the limit.

The buffer is initially about 16K[19] bytes long. All commands[20] and print data are placed in the buffer and must be included in the size limits. The printer does not indicate when the buffer is full. The application must make sure that the buffer is not overfilled. The printer simply stops saving information when it is full. As the buffer fills, the input data is printed normally. The effect of the macro start command is to clear the buffer and to start to save the input data. The macro stop command stops saving data and initializes internal pointers for the next print. To store the data in the nonvolatile flash, it must be named and saved by one of the user-store save commands.

When the macro buffer is inserted into the data stream, configuration commands (like font or pitch changes) remain in effect after the macro is processed. Illegal commands are placed in the buffer and take up space.

Horizontal color graphics should be sent to the printer compressed. If the data is not compressed, it is saved in the macro buffer. If the buffer is saved into the user-store nonvolatile flash, there must be enough room in the user store for all of the data. As user-store space is used, the macro buffer will be larger than

[19] The actual buffer is smaller because of the overhead.

[20] IPCL commands are converted by the printer into an equivalent [ESC] code and then placed in the save buffer. The equivalent [ESC] code should be used to calculate the size of the save buffer data.

the available space in user store. Only the used space is saved, but it is possible to define a macro that does not fit in the remaining user-store space.

Legacy Macro Commands

The POSjet®1500 Printer maintains a number of legacy PcOS macro commands. It is intended that these commands not be used for new applications as the new commands allow multiple macros to be saves.

Function	**Process user macro**
ASCII	[ESC] g <0>
Hexadecimal	1BH 67H 00H
Decimal	<27> <103> <0>
IPCL	&%GP
EPOS	[ESC] g <0>
Description	The [ESC] g <0> command prints the user-store data buffer.

Function	**Start macro record**
ASCII	[ESC] g <1>
Hexadecimal	1BH 67H 01H
Decimal	<27> <103> <1>
IPCL	&%GS
EPOS	ESC] g <1>
Description	The [ESC] g <1> command clears the user-store data buffer and begins recording data. The next 2000 bytes (including characters and commands) are recorded.

Function	**Stop macro record**
ASCII	[ESC] g <2>
Hexadecimal	1BH 67H 02H
Decimal	<27> <103> <2>
IPCL	&%GE
EPOS	[ESC] g <2>
Description	The [ESC] g <2> command stops recording user-store data information. The buffer is not saved into the nonvolatile memory.

Function	**Stop macro record and save**
ASCII	[ESC] g <3>
Hexadecimal	1BH 67H 03H
Decimal	<27> <103> <3>
IPCL	&%GW
EPOS	[ESC] g <3>
Description	The [ESC] g <3> command stops recording graphic save information. The buffer is saved into the user-store nonvolatile memory under the name, "ESCg3_Save"
Note 1	The [ESC] g <3> command is supplied for compatibility with the Series 80PLUS and 90PLUS Printers.

Bar Codes

The POSjet®1500 Printer supports the ability to print bar codes. The printer offers a number of formats as defined below. The host does not need to form the graphic image for these bar codes. The host need only send the printer the information to be bar coded and a graphic is generated by the printer. In some cases, a check character is required by the format. In most cases, the printer generates the check character and inserts it correctly in the format. The printer uses internal graphic modes to form bar code images, and the images are adjusted for ink bleed. In general, the bar codes generated by sending graphic data to the printer are not as readable as the bar codes the printer generates. Bar codes are printed at a 208 x 192 resolution.

Barcodes may be printed horizontally or vertically. When printed vertically the length of the barcode can be greater (i.e. more characters can be printed). You can not print human readable interpretation (HRI) character in vertical mode. It is generally better to print vertical barcodes by printing horizontal barcodes in page mode rotated 90° or 270°. You can then mix HRI and other text with the barcodes.

Function	**Print bar code**
ASCII	[ESC] b <n> {information} [ETX]
Hexadecimal	1BH 62H <n> ... 03H
Decimal	<27> <98> <n> ... <3>
IPCL	&%25 ... [CR] Interleaved 2 of 5 &%39 ... [CR] Code 39 &%12 ... [CR] Code 128 &%28 .<m_1> <m_2> Code 128 (allows a two character length, preceding the information) &%UP ... [CR] UPC A &%UE ... [CR] UPC E &%EA .. [CR] EAN-13 &%E8 ... [CR] EAN-8 &%93 .. [CR] Code 93 &%CB .. [CR] Codabar
EPOS	[ESC] b <n> or [GS] k <n>
Description	The [ESC] b <n> {information} [ETX] command prints information as a bar code. The bar code is centered on the print zone.

Where n =			
	0	Interleaved 2 of 5	Numeric (0-9) only; must be even number of digits
	1	Code 39	26 uppercase letters (A-Z); 10 digits (0-9)
	2	Code 128	Three sets of 106 different characters
	3	UPC A	Numeric (0-9) only; 11 digits
	4	EAN-13	Numeric (0-9) only; 12 digits
	5	UPC E	Numeric (0-9) only; 11 digits
	6	EAN-8	Numeric (0-9) only; 7 digits
	7	Code 93	26 letters; 10 digits (0-9); and 7 special characters
	8	Codabar	10 digits (0-9); 4 start/stop characters, A, B, C, and D; and 6 special characters.

NOTE: You may print barcodes in page mode. If you rotate them 90° or 180° you can get significantly longer barcodes.

Interleaved 2 of 5

Interleaved 2 of 5 is a high-density, self-checking, continuous, numeric bar code. It is mainly used where fixed-length numeric fields are required. The data field must be an even number of characters. If an odd data field is sent to the POSjet® 1500 Printer, it will be zero padded. Due to space limitations, only 16 characters can be printed.

Code 39

Code 39 is an alphanumeric bar code. It is a discrete, self-checking, variable-length code. The printer prints the complete data field. Due to space limitations, only eight characters can be printed. If illegal characters pass to the printer, they are converted to legal codes. (For example, a → A.)

Code 128

Code 128 is an alphanumeric bar code. It is a high-density, variable-length, continuous code that employs multiple element widths. Code 128 has three possible start codes. The start code defines the code set, Code A, B, or C that will be used to generate the barcode. The POSjet®1500 allows the Code Set to be specified or it can be select by the printer based on the information in the data field.

To specify code set: [ESC] b <2> <Code>{information} [ETX]

If the first character in the data field <Code> can specify the Code set as follows:

Code Set A <135>
Code Set B <136>
Code Set C <137>

The printer will print the complete data field from the selected set.. Due to space limitations, only ten characters can be printed. The check digit is generated and printed by the printer.

To have the printer selected code set: [ESC] b <2> <Length>{information}

If the first character <Length> is from 1 to 31, the printer will automatically select Code A, B, or C depending on the data present. If the data is all numeric, the data can be printed as pairs. This effectively doubles the amount of data that can be printed. The check digit is generated and printed by the printer.

Note: If the first character is greater than <31> and not <135> through <137>, the printer will discard the first character and print the data from Code A.

Code 128 Note: The 'A' space is defined as a <0>, which makes programming difficult and causes control character conflicts for the printer. To solve the problem, the POSjet®1500 Printer subtracts 32 from all characters that are to be included in the bar code. In the Code 128 definition, an 'A' is <33>; however, the printer converts an ASCII 'A' (<65>) to a <33> internally. This sets Code 128C and the start codes off by 32.

UPC A

UPC A is a fixed-length, numeric, continuous code that employs four element widths. The printer supports Universal Product Code Version A, E, EAN-8, and EAN-13. Version A encodes 11 digits. Typically, the UPC A format starts with a number system digit, five-digit manufacturer's code, five-digit product code, and a check digit. The printer makes no assumptions about any of the codes except the check digit. The printer prints an UPC bar code with the 11 digits sent to it and generates the check digit. If fewer than 11 digits are sent, the remaining digits will be zeros. The printer prints an UPC that is about 130% the size of the UPC nominal standard, which provides optimal readability.

UPC E

UPC E is a zero suppression version of UPC. The printer requires that the first digit is zero for number system zero. If it is not zero, the bar code is not printed. The printer does the compression based on the compression rules for UPC E, prints an UPC bar code based on the 11 digits sent to it, and generates the check digit. If fewer than 11 digits are sent, the remaining digits will be zeros. The printer prints an UPC that is about 130% the size of the UPC nominal standard, which provides optimal readability.

EAN-13

EAN-13 is a fixed-length, numeric, continuous code that employs four element widths. The printer supports EAN-13, which is a superset of UPC that encodes 12 digits. Typically, the format starts with a number set digit, which defines how the next six digits are encoded. The next five digits have fixed encoding. The last is a check digit. The printer prints an EAN-13 bar code with the 12 digits sent to it and generates the check digit. If fewer than 12 digits are sent, the remaining digits will be zeros. The printer prints an EAN-13 bar code that is about 130% the size of the nominal standard, which provides optimal readability.

EAN-8

EAN-8 is a fixed-length, numeric, continuous code that employs four element widths. The printer supports EAN-8, which is a superset of UPC that encodes seven digits. The printer prints an EAN-8 bar code with the seven digits sent to it and generates the check digit. If fewer than seven digits are sent, the remaining digits will be zeros. The printer prints an EAN-8 bar code that is about 130% the size of the nominal standard, which provides optimal readability.

Code 93

Code 93 is a variable-length, alphanumeric bar code. The complete data field is printed by the printer. Due to space limitations, only 10 characters can be printed.

Codabar

Codabar is a variable-length format, primarily used for numeric symbols. It offers 16 data characters, including the numeric digits zero through nine, and -, $, :, /, ., and +. Four unique start/stop characters, designated A, B, C, and D, are also available. Due to space limitations, only 12 characters can be printed.

Note 1 A [CR] may also be used in place of the [ETX] to end the bar code data field.

Note 2 Only information that is usable in a particular bar code will be printed.

Function	**Set bar code height**
ASCII	[ESC] [EM] B <n>
Hexadecimal	1BH 19H 42H <n> of digits
Decimal	<27> <25> <66> <n>
IPCL	&%BH <m_1> <m_2>
EPOS	[GS] h <n>
Description	The [ESC] [EM] B <n> command sets the bar code height and speed where <n> is the number of print passes and <m> is the speed. Each pass is about 0.11 inch high. When n = <0>, the printer returns to the default value of four passes. For UPC, the default value is seven. Any value from zero to nine may be specified.

Function	**Set bar code justification, human readable interpretation (HRI) character print mode, and print direction**
ASCII	[ESC] [EM] J <n>
Hexadecimal	1BH 19H 4AH <n>
Decimal	<27> <25> <74> <n>
IPCL	&%BJ <m_1> <m_2>
EPOS	none The power on default is center justified with HRI characters not printed.
Description	The [ESC] [EM] J <n> command selects the operation of the bar code justification, HRI characters, and print direction.
Where n bits	**n IPCL** **`76543210`**

		`------xx`	Justified
0	00	`------00`	Left
1	01	`------01`	Center
2	02	`------10`	Right
		`--xx----`	HRI characters
0	00	`--00----`	Not printed
16	16	`--01----`	Printed above the bar code
32	32	`--10----`	Printed below the bar code
48	48	`--11----`	Printed above and below the bar code
		`-x------`	Vertical print mode. (Page mode may work better)
0	00	`-0------`	Bar code printed in horizontal direction (default)
64	64	`-100----`	Bar code printed in vertical direction

Note 1 The [ESC] [EM] J <n> command only affects bar code printing.

Note 2 HRI is not available in vertical print mode. You may print normal barcodes in page mode and you will get HRI and significantly longer barcodes.

POSjet® 1500 Validation Operation

The POSjet®1500 is configured with a validation feature allowing up to 12 lines of print on a one-ply, inserted form or check. Additionally, a check print function allows the full front or back to be printed. These operations may be manually or host controlled.

Manual Validation.

To enter manual validation mode, press the “FORM” button. The Form LED will start to blink. This indicates the printer is waiting for a form to be inserted. The operator may now insert a form into the printer's validation slot. Upon sensing the form, the printer will automatically feed the form to the current validation slip stop. Any data sent to the printer following this operation will be printed on the form.

Host Controlled Validation.

Host controlled validation uses the Validation select command to initiate a validation operation. There are two validation select commands. One positions the form to the current validation slip stop. The other command positions the form to a specific number of lines based on the current printer settings.

The POSjet®1500 has the ability to print up to 5 inches on a narrow form by loading it into the printer past the current slip stop.

Host Controlled Validation.

Host controlled validation uses the Validation select command to initiate a validation operation. There are two validation select commands. One positions the form to the current validation slip stop. The other command positions the form to a specific number of lines based on the current printer settings. Also available in Portrait mode is a load to top of form command that positions the inserted form to the top most printable position.

Inserted forms are restricted to the following sizes:

Validation Form Requirements		**Portrait** Width	Height	**Landscape** Width	Height
Max.	(inch)	2.75	8.5	8.5	11
	(mm)	69.8	222.3	215.9	279.4
Min.	(inch)	2.75	2.75	2.75	2.75
	(mm)	69.8	69.8	69.8	69.8
Max Print Area	(inch)	2.5	7.8	2.5	1.5
	(mm)	63.5	198.1	63.5	38.1

Table 39 Validation Form Requirements and Print Area

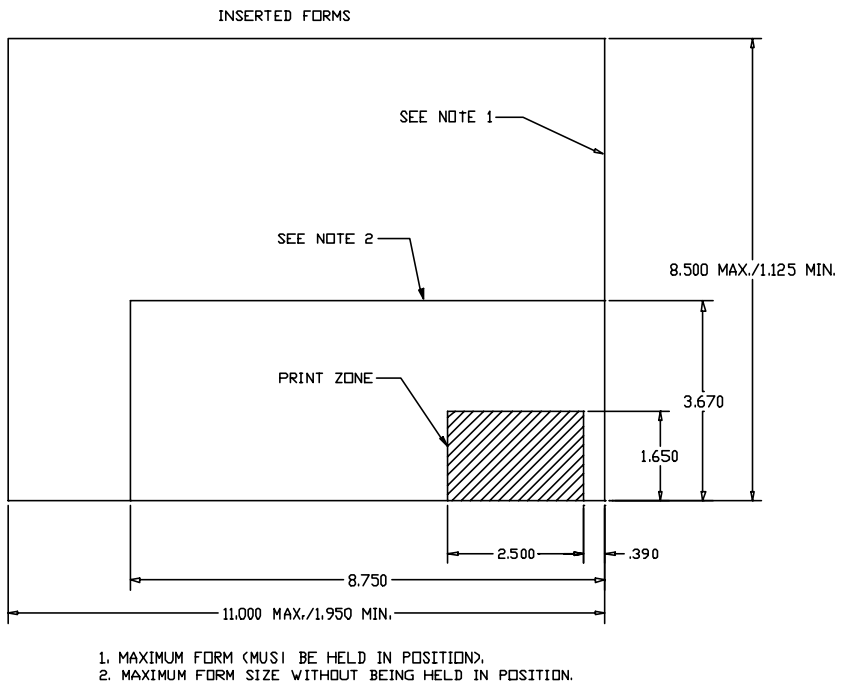

Figure 37 Validation Print Zone

In portrait mode the POSjet® 1500 has the ability to print up to 6 inches on a narrow form by loading it into the printer past the current slip stop.

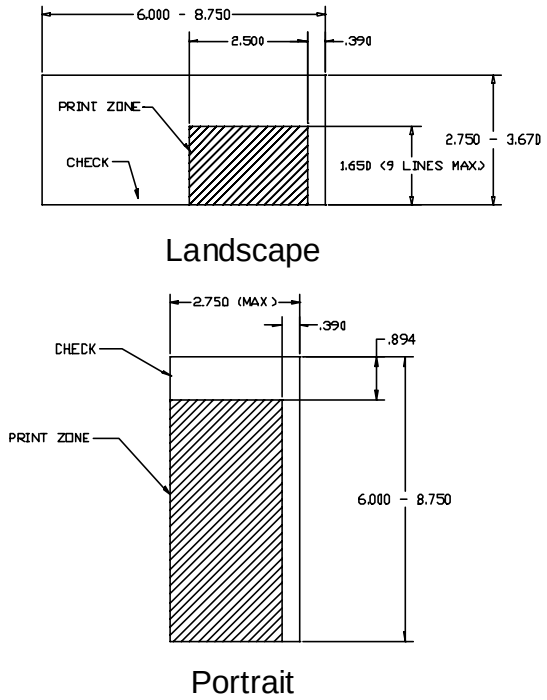

Figure 38 Check Printing

To load a form past the slip stop, use the normal validation select commands and follow it with a load to top of form command.

Station Select Commands

The following commands are used to load and position validation forms.

Function	**Select receipt station**
ASCII	[ESC] f
Hexadecimal	1BH 66H
Decimal	<27><102>
IPCL	&%SR
EPOS	[ESC] c 0 <n>
Description	This command ejects a form, if present, and enters receipt mode. All subsequent data will be printed on the receipt.

Function	**Select validation station**
ASCII	[ESC] j
Hexadecimal	1BH 6AH
Decimal	<27><106>
IPCL	&%VS
EPOS	[ESC] c 0 <n>
Description	This command requests that a form be inserted in the printer. The FORM indicator will blink until the form is loaded. When the printer senses the form, it automatically feeds it into the proper position and all subsequent data is printed on the form.
Note:	The form position is determined by the programmable slip stop. See the [ESC] [EM]L command for setting the slip stop.
Note:	This command may be configured with a time out. See [ESC][EM]C for details.
Note:	An ENQ <16> will force the printer to stop waiting for a form and return to receipt mode.

Function	**Select validation station to N lines**
ASCII	[ESC] k <n>
Hexadecimal	1BH 6BH <n>
Decimal	<27><107> <n>
IPCL	&%VL
EPOS	
Description	This command sets the validation stop to <n> lines and then requests that a form be inserted in the printer. The FORM indicator will blink until the form is loaded. When the printer senses the form, it automatically feeds it into the proper position and all subsequent data is printed on the form.
Note:	This command may be configured with a time out. See [ESC][EM]C for details.
Note:	An ENQ <16> will force the printer to stop waiting for a form and return to receipt mode.

Function	**Load to top of form**
ASCII	[ESC]m
Hexadecimal	1BH 6DH
Decimal	<27> <109>
IPCL	&%VD

Description Position a form to the top edge. This command is typically used to print the face of a check in rotated print mode. It will feed the check into the printer so the top of the check is in position to print.

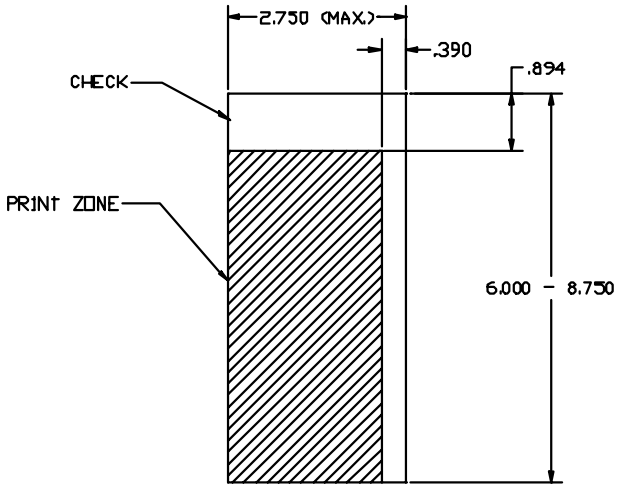

CAUTION: This command should only be used with forms that are narrower than 2.75 inches. Forms that are wider than 2.75" will jam and could cause a printer fault. .

Electronic Journal

The POSjet® 1500 has the capability to store Electronic Journal (EJ)[21] data in flash memory. There are two ways entries can be made in the EJ. The first is by selecting the journal station. The second is by requesting that print data (either validation or receipt) be placed into the EJ.

Before the electronic journal can be used it must be configured and initialized.

Configuring the Electronic Journal

The POSjet® 1500 has 196K of flash that can be assigned to the EJ (Electronic Journal) or to Extended User Store (EUS). The 196K is segmented in 64K segments which may be assigned to either to EJ or EUS. That is you can assign 2 segments or 128K to the electronic journal and the remaining segment or 64K will be assigned to EUS.

When EJ is in use, you can not reconfigure the configuration of the extended flash memory. If you want to reconfigure the flash, the EJ must be erased. To erase the EJ you must know the password that was assigned when it was initialized. When printers are initially configured by Transact, the extended flash is erased and partitioned but not initialized. Before you use the EJ you must initialize it.

CAUTION: You can use the EUS without initializing the EJ. If any data has been stored in the EUS, it will be lost if the extended flash is repartitioned.

CAUTION: If you have initialized the EJ and don't know the password, there is no way to erase the electronic journal without returning the printer for service. This is not covered by the warrantee. All POSjet® 1500 are shipped with the EJ partitioned and erased but not initialized.

[21] It must be noted that the POSjet® 1500 does not maintain the current time or date. If a journal entry is to contain the time and/or date, the host system must transfer this as printable text.

Initializing the Electronic Journal

Once the electronic journal is partitioned, it can be initialized. Initializing the EJ sets the password and formats the flash to accept journal entries. Each entry may be any length up to 8K. Entries greater than 8K are truncated. Entries will be added to the EJ until it is full. If the EJ is full, entries will be lost. The [ENQ]<25> command can be used to query the state of the electronic journal.

Printing/Reporting and Resetting the Electronic Journal

The Electronic journal may be printed on the receipt or reported to the host. The printed report will print each journal entry with a entry separator defined by the user (or, if not defined, with a default), The journal can be erased and reinitialized at any time. It is up to the host application to assure the EJ is reported or printed before it is erased. To provide some level of security on the erase process, the erase function is password protected. The password is set by the previous initialize command. See the [ESC][GS]I ans E commands.

Electronic Journal Configuration and Reporting Commands

Function	**Electronic Journal Initialize and set password**
ASCII	[ESC][GS]I<Password><0>
Hexadecimal	1BH 1DH 49H <Password><0x00>
Decimal	<27> <29><73> <Password><0>
IPCL	&%EI<Password>&
EPOS	
Description	This command initializes the Electronic Journal and sets the password that allows the Electronic Journal to be erased. The password may be up to 14 characters and may contain any alphanumeric characters.
NOTE:	The electronic Journal can not be deleted without this password.

Function	**Electronic Journal Erase the Electronic Journal**
ASCII	[ESC][GS]E<Password><0>
Hexadecimal	1BH 1DH 45H <Password><0x00>
Decimal	<27> <29><50> <Password><0>
IPCL	&%EC<Password>&
EPOS	
Description	This command erases the Electronic Journal. The password was set using the [ESC][GS]I command.
NOTE:	The electronic Journal can not be deleted without the correct password.

Function	**Print the Electronic Journal**
ASCII	[ESC][GS]P< S_l>< S_h>< L_l>< L_h>
Hexadecimal	1BH 1DH 50H < S_l>< S_h>< L_l>< L_h>
Decimal	<27> <29><80> < S_l>< S_h>< L_l>< L_h>
IPCL	&%EP <S> <L> (L and S are 4 digits ie. 00100020 for 20 records starting at 10)
EPOS	
Description	This command prints all or part of the electronic journal. <Sh><Sl> specifies the first record to be printed and <Lh><Ll> specifies the number of records to print. If <Lh><Ll> are 0, records from the specified start to the last record are printed. Setting both start and end to 0 will print the complete contents of the electronic journal.
Note:	The first record is identified as record 1.

Function	**Report the Electronic Journal**
ASCII	[ESC][GS]R< S_l>< S_h>< L_l>< L_h>
Hexadecimal	1BH 1DH 52H < S_l>< S_h>< L_l>< L_h>
Decimal	<27> <29><82> < S_l>< S_h>< L_l>< L_h>
IPCL	&%EQ <S> <L> (L and S are 4 digits ie. 00100020 for 20 records starting at 10)
EPOS	
Description	This command reports all or part of the electronic journal. <Sh><Sl> specifies the first record to be printed and <Lh><Ll> specifies the number of records to report. If <Lh><Ll> are 0, all records from the specified start to the end are reported. Setting both start and end to 0 will report the complete contents of the
Note:	The first record is identified as record 1. The report format will be as follows: [STX] Record number [SOH] Record Text [ETX] … [EOT]

Function	**Set the Electronic Journal record header**
ASCII	[ESC][GS]F<String %d><0>
Hexadecimal	1BH 1DH 46H
Decimal	<27> <29><70>
IPCL	None
EPOS	
Description	This command this command allows the record that is printed between records to be changed. The default format is: **\r\nRecord %d\r\n**
Where:	**\r** represents CR, **\n** represents LF, **%d** represents the position of the record number.
NOTE:	The **%d** must be present.

Function	**Print/Report an Electronic Journal log.**
ASCII	[ESC][GS]L Print the report
Or	[ESC][GS]l Return the report
Hexadecimal	1BH 1DH 4CH or 6CH
Decimal	<27> <29><76> or <108>
IPCL	&%UL (No IPCL for returning the report)
EPOS	
Description	This command prints or returns a summary of the Electronic journal. The format is as follows: **EJ is Inactive.** (The Electronic journal is off or not initialized)
Or	**EJ has xxxx Records and is full.**
Or	**EJ has xxxx Records with yyyyyy bytes free.**

Function	**Query the Electronic Journal**
ASCII	[ENQ]<25>
Hexadecimal	05H 19H
Decimal	<05> <25>
IPCL	None
EPOS	
Description	This is a real time status request that returns the current state of the electronic journal.
Return Format:	[NAK]<25><42><n_H><n_L> [NAK] EJ is not active. It is either off, not initialized or full. If n_H*256 + n_L is not zero, the EJ is available but not initialized and n_H*256 + $n_L$is the available space in K (1024) bytes.
Or	[ACK]<25><42><n_H><n_L> [ACK] the EJ is active an available and n_H*256 + $n_L$is the available space in K (1024) bytes.

Electronic Journal Entries

There are two ways to place information in the EJ. The first is by selecting journal mode. The second is by requesting that Validation or Receipt information is copied into the Electronic Journal.

If you select journal mode, information sent to the printer not printed but stored in the Flash Memory. The information is stored as records in a linked list. Whenever a "journal mode begin" command is received, a new record is started. When Journal modes is exited, the record is finished closed and the link updated. This journal mode is intended to be printed at a later time. No printer control codes are allowed in the journal. Only [CR], [HT]and [LF] commands are allowed. Any other control character will end the journal record. Use [EOT] or [NUL] to provide the most graceful exit from journal mode.

The other way to place information in the EJ is with Carbon Copy mode. In this mode select information sent to the validation or receipt station is carbon copied into the EJ. A record is started with the "Electronic Journal Begin" command and ended with the "Electronic Journal End" command. There is an "Electronic Journal Suspend and resume command to allow some information not to be saved.

```
[esc][P<12[esc]I<1>[esc]0[esc]a<1>
[ESC][@<4><0><0><0><34><2>[ESC]c<1>
QUICK MART[CR][LF]
[ESC][@<4><0><0><0><17><1>
1234 Rt1 Anytown,Ct[CR][LF]
[esc]c<0>[esc]I<0>
203-123-4567[cr][lf]
[esc][P<15>[esc]a<0>[CR][LF]
[esc]l<3>                                  Start journal record
---{Date:0} {Time:0:}--[cr][lf]
ST# 2000  OP# 00067  TE# 021 0035[CR][LF]
[esc]l<2>                                  Suspend the record
KLEENEX FAM  D04 QTY 1     1.68 J[CR][LF]
RITZ         D01 QTY 1     2.50 D[CR][LF]
CHIPS        D01 QTY 1     1.50 D[CR][LF]
STORAGE BAG  D04 QTY 1     1.50 J[CR][LF]
[esc]<1>                                   Resume the record
               SUB TOTAL   8.68[CR][LF]
               SALES TAX   1.50[CR][LF]
                         ------[CR][LF]
               TOTAL      10.18[CR][LF]
               CASH TEND  20.00[CR][LF]
[ESC]c<1>
               CHANGE DUE  9.82[CR][LF]
[ESC]c<0>
[esc]l<0>                                  End the record
[esc]a<1>[LF][LF][ESC][@<4><0><0><0><34><2>
THANK YOU [CR][LF]
[ESC][@<4><0><0><0><17><1>
FOR SHOPPING WITH US[cr][lf]
[esc]a<0>[esc]d<15>[esc]v
```

The resulting journal entry would then only contain:

```
---{Date:0} {Time:0:}--
ST# 2000  OP# 00067  TE# 021 0035
            SUB TOTAL   8.68
            SALES TAX   1.50
                      ------
            TOTAL      10.18
            CASH TEND  20.00
            CHANGE DUE  9.82
```

In carbon copy mode any printer control commands in the record data will be added to the journal record. As the records are printed those commands will be used to format the print. Some care should be taken to assure that only format control command that you intend to be printed later get in the journal.

NOTE: Information is gathered in packets or 16 bytes. If power is lost before the record is closed, up to 16 bytes of information may be lost. The link list will be repaired when power is next applied.

Journal mode

Journal mode is a station select command. All data sent to the printer, following the Journal mode select command, is stored in the EJ as a single record. Any control commands sent to the Electronic journal will end the journal entry. Only [CR] [LF] and [HT] commands may be sent in journal mode. An EOT, NUL or any printer command will end journal mode. Typically and EOT, NUL or station select will be used to end the journal mode.

Function	**Electronic Journal Mode Begin**
ASCII	[ESC]{
Hexadecimal	1BH 7BH
Decimal	<27> <123>
IPCL	None
EPOS	
Description	The function enters journal mode. Only [CR], [HT] and [LF] commands are allowed in journal mode. Use [EOT] or [NUL] or, a station select command to exit Journal mode.
NOTE:	Any control code less than a space (ie less than 20H), except as noted will force the journal mode to end.

Carbon Copy Journal Mode

Carbon copy mode allows information sent to the receipt or validation station to be copied into the EJ. An EJ entry is started with a Start CC mode command and continues until a station select command is received or a Stop CC command is received. The CC operation may be suspended and restarted by a CC suspend and CC resume command. (Note. CC suspend and resume do not generate new EJ records.)

Function	**Electronic Journal Begin**
ASCII	[ESC]l <3>
Hexadecimal	1BH 6CH<3>
Decimal	<27> <108><3>
IPCL	&%EB
EPOS	
Description	This command begins a carbon copy journal entry.

Function	**Electronic Journal Suspend**
ASCII	[ESC]l <2>
Hexadecimal	1BH 6CH<2>
Decimal	<27><108><2>
IPCL	&%ES
EPOS	
Description	This command temporarily suspends carbon copy journal entry.

Function	**Electronic Journal Resume**
ASCII	[ESC]l <1>
Hexadecimal	1BH 6CH<1>
Decimal	<27><108><1>
IPCL	&%ER
EPOS	
Description	This command resumes a temporarily suspended carbon copy journal entry.

Function	**Electronic Journal End**
ASCII	[ESC]l <0>
Hexadecimal	1BH 6CH<0>
Decimal	<27> <108><0>
IPCL	&%EE
EPOS	
Description	This command ends a carbon copy journal entry.

Auto Journal

The POSjet®1500 can simulate an impact printer's ability to duplicate a validation operation on impact receipt paper. The printer will store the validation information and repeat it on the receipt after the validation form is removed.

Function	**Activate/Deactivate Journal**
ASCII	[ESC][GS]A<n>
Hexadecimal	1BH 1DH 41H<n>
Decimal	<27> <29><65><n>
IPCL	&%JO = Journal on &%JF = Journal off
EPOS	
Description	**This command activates or deactivates the Auto Journal.**
Where	**n = 1 activates and n=0 deactivates the Auto Journal**
	The auto journal repeats any validation data on the receipt after the validation form is removed from the printer. This feature can be used to simulate the ability of impact printers to generate a record of validation operations on impact paper on the receipt station.
NOTE:	**This command should not be issued when in validation mode.**
NOTE:	**This feature may be activated by default by setting Auto Journal in the configuration menu.**

Validation operation control

The POSjet®1500 supports a number of commands that alter the way the validation operates.

Function	**Set Wait for slip Timeout**	
ASCII	[ESC][EM]C<n>	
Hexadecimal	1BH 19H 43H<n>	
Decimal	<27> <25><67><n>	
IPCL	None	
EPOS		
Description	**This command sets the period of time the printer will wait for the form or check to be presented to the printer before the validation command is aborted. The default is to wait forever.**	
Where n =	**0**	**Wait forever**
	1	**10 Seconds**
	…	
	255	**42.5 minutes.**

Function	**Set Wait for slip removal timeout**
ASCII	[ESC][EM]D<n>
Hexadecimal	1BH 19H 44H<n>
Decimal	<27> <25><68><n>
IPCL	None
EPOS	
Description	**This command sets the period of time the printer will wait for the form or check to be removed from the printer before the next print operation occurs. The default is to wait forever.**
Where n =	**0 Wait forever** **1 10 Seconds** **…** **255 42.5 minutes.**

Function	**Set Slip Sense Delay**
ASCII	[ESC][EM]V<n>
Hexadecimal	1BH 19H 56H<n>
Decimal	<27> <25><86><n>
IPCL	None
EPOS	
Description	**This command sets the period of time the printer will wait after the form is sensed before the validation drive starts. This time allows the operator time to position the form before the printer secures it. The default is a pause of 300 mS.**
Where n =	**1 10 mS** **…** **30 300 mS.** **…** **255 2.55 seconds.** **Typical values are from 200 to 400 mS.**

Function	**Set validation slip stop**
ASCII	[ESC][EM]L<n>
Hexadecimal	1BH 19H 44H<n>
Decimal	<27> <25><68><n>
IPCL	None
EPOS	
Description	**This command sets the load position of the form or check in millimeters. The value of <n> may be from 3 to 40 mm. Values greater than 40 are set to the maximum load depth. This command over rides any configured values.**
Note:	**This command effects only the [ESC]j command.**
Note:	**This value may be set as part of the configuration process.**

Function	**Cancel Validation Waiting**
ASCII	[ENQ] <16>
Hexadecimal	05H 10H
Decimal	<5> <16>
Description	The [ENQ] <16> causes the printer to stop waiting for a validation form and return receipt mode.
Response	[ACK] <16> Wait canceled [NAK] <16> Printer was not waiting

Miscellaneous Control

Function	**Disable paper out sensor**
ASCII	[ESC] 8
Hexadecimal	1BH 38H
Decimal	<27> <56>
IPCL	&%PF
EPOS	none
Description	The [ESC] 8 command temporally disables the paper out sensor. The printer does not stop printing or go off-line when it senses it is out of paper. The inquire commands still return paper out status.

Function	**Enable paper out sensor**
ASCII	[ESC] 9
Hexadecimal	1BH 39H
Decimal	<27> <57>
IPCL	&%PO
EPOS	none
Description	The [ESC] 9 command enables paper sensing and is intended to reverse the effect of the disable paper out sensor command. If the printer is out of paper when the command is issued, it goes off-line.

Function	**Set left/right print margins**
ASCII	[ESC] X <n_1> <n_2>
Hexadecimal	1BH 58H <n_1> <n_2>
Decimal	<27> <88> <n_1> <n_2>
IPCL	none
EPOS	[ESC] l, [ESC] Q
Description	The [ESC] X <n_1> <n_2> command sets left and right print margins in characters from the home position. Where n_1 = left margin and n_2 = right margin, the absolute position depends on the current print pitch. If the left and right margins are set to the right of the current horizontal position, the new margins become valid in the same line. If the left margin is set to the left of the current horizontal position, and the right margin is set to the right of the current horizontal position, the right margin setting becomes valid in the same line; but the left margin setting becomes valid in the next line. When the left and right margins are set to the left of the current horizontal position, both left and right margin settings appear to become valid in the next line because an auto-CR is performed by the subsequent data.

Function	**Clear print buffer**
ASCII	[CAN]
Hexadecimal	18H
Decimal	<24>
IPCL	&%RP
EPOS	[CAN]
Description	The [CAN] command clears the print buffer and any unprinted information in the printer received before it. If the input buffer is not being processed because the printer is out of paper or a form is not inserted, the [CAN] command will not be processed until after the error is cleared. The [CAN] command does not restore default conditions. It only clears the print buffer.

Function	**Query marker**
ASCII	[ESC] q <n>
Hexadecimal	1BH 71H <n>
Decimal	<27> <113> <n>
IPCL	none
EPOS	none
Description	The [ESC] q <n> command returns a status to the host when it is processed.
Response	**[SOH] <n**
	The [ESC] q <n> command may be placed in the print data. When it is processed by the printer, will return a progress status marker. The value of <n> can be any 8-bit value. It is returned to the host unaltered. The intent is for it to be a sequence number. The command can be used to track the print progress of the printer or verify that data has been printed.
Note 1	The [ESC] q <n> command is a line terminator that causes the printer to print all previous data. If a normal line terminator like a [CR] is not supplied, right justify and auto-center do not function correctly. All data is left justified. [ESC] q does not perform a [CR] or [LF] function.

Function	**Open cash drawer**
ASCII	[ESC] x <n>
Hexadecimal	1BH 78H <n>
Decimal	<27> <120> <n>
IPCL	&%D1 (Cash Drawer 1) &%D2 (Cash Drawer 2)
EPOS	[ESC] p
Description	The [ESC] x <n> command charges the cash drawer, <n>, for 150 ms.
Where <n> =	<1> (01H) or 1 (31H) for Cash Drawer 1 <2> (02H) or 2 (32H) for Cash Drawer 2
	The time period that drawer is activated can be changed in the configuration menu. Activation time ranges from 25 ms to 250 ms.
Note 1	Cash drawer open commands are processed as part of print data. They are not immediate commands and are not processed until found in the input buffer by the print processor.
Note 2	Cash Drawer 2 is factory configurable in one of two modes. Either pin 2 or 3 is active depending on an internal jumper setting. The factory default is pin 3. Cash Drawer 1 is always on pin 2. The cash drawer status is defined as an open circuit for drawer closed.

Function	**Perform Auto Cut**
ASCII	[ESC] v
Hexadecimal	1BH 76H <n>
Decimal	<27><118>
IPCL	&%FC &%PC
EPOS	[ESC] I or [ESC] m
Description	The [ESC] v command operated the auto cutter.
Note 1	The auto cutter is optional. If the auto cutter is not installed this command will be ignored.

Function	**Initialize the printer**
ASCII	[ESC] @
Hexadecimal	1BH 40H
Decimal	<27> <64>
Description	The [ESC] @ command initializes the printer. All settings, including character font and line spacing, are canceled.

Function	**Audio alert**
ASCII	[BEL]
Hexadecimal	07H
Decimal	<7>
IPCL	&%BL
EPOS	[BEL]
Function	When enabled, the [BEL] command starts the audio alert sequence.
Description	The default is a single sound, lasting the period of time defined by the audio alert setting. If the audio alert is off, it does not function.

Function	**Configure audio alert**
ASCII	[ESC] [BEL] <n_1> <n_2> <n_3>
Hexadecimal	1BH 07H <n_1> <n_2> <n_3>
Decimal	<27> <7> <n_1> <n_2> <n_3>
IPCL	None
EPOS	None
Description	The [ESC] [BEL] <n_1> <n_2> <n_3> command alters the way the audio alert sounds. The default is a single sound lasting the period of time defined by the audio alert setting. The [ESC] [BEL] <n_1> <n_2> <n_3> command allows the sound to be altered.
Where	<**n_1**> is the number of alert cycles <**n_2**> is the on time of the alert cycle in ten Ms intervals <**n_3**> is the off time of the alert cycle in ten Ms intervals

Function	**Enable/disable paper feed**
ASCII	[ESC] p 5 <n>
Hexadecimal	1BH 70H 35H <n>
Decimal	<27> <112> <53> <n>
Range	$0 \le n \le 255$
Description	The [ESC] c 5 <n> command enables or disables the FEED button. When the least significant bit (LSB) of <n> = one, the FEED button is disabled; when it is zero, the button is enabled. To prevent problems caused by accidentally pressing the FEED button, use the command to disable it. The FEED button is temporarily enabled, regardless of how the command is set during the wait time set by the [GS] z 0 command for paper insertion and during the recovery confirmation time.
Where <n>	Bit 0 = 1 the FEED button is disabled Bit 0 = 0 the button is enabled.

Function **Select paper sensor(s) to stop printing**

ASCII [ESC] p 4 <n>
Hexadecimal 1BH 70H 34H <n>
Decimal <27> <112> <52> <n>
Range 0 ≤ n ≤ 255

Description The [ESC] p 4 <n> command selects the sensors that tell the printer to stop printing. The default setting occurs when only the Paper out sensor stops printing. When the paper roll near-end sensor is enabled and the sensor detects a near-end condition during printing, the printer completes the current line and then automatically goes off-line. Replacing a new paper roll restarts the printing. When the paper roll near-end sensor is disabled and a paper near-end condition is detected during printing, the paper out LED comes on, but the printer continues to print.

NOTE: The POSjet® 1500 does not allow the paper out sensor to be disabled. It is always on.

<n> is defined as follows:

Bit	On/Off	Hexadecimal	Decimal	Function
0,1	Off	00H	<0>	Paper roll near-end sensor disabled
	On	01H,02H,03H	<1>,<2>,<3>	Paper roll near-end sensor enabled
7	-	00H	<0>	Undefined

Table 40 Paper Sensor Commands

Function **Select paper sensor(s) to output paper-end signals**

ASCII [ESC] p 3 <n>
Hexadecimal 1BH 70H 33H <n>
Decimal <27> <112> <51> <n>
Range 0 ≤ n ≤ 255

Description The [ESC] p 3 <n> command selects the paper sensor that outputs a paper-end signal to the parallel interface when a paper-end is detected. The default setting is when all sensors are enabled. (<n> = 15). It is possible to select multiple sensors to output signals. If any of the sensors detect a paper end, the paper end signal is output. The command is only available with a parallel interface. The paper-end sensor is an option. If the sensor is not equipped, the settings of bits 0 and 1 of the command are not effective.

Bit	On/Off	Hexadecimal	Decimal	Function
0	Off	00H	<0>	Paper roll near-end sensor disabled
	On	01H	<1>	Paper roll near-end sensor enabled
1	Off	00H	<0>	Paper roll near-end sensor disabled
	On	02H	<2>	Paper roll near-end sensor enabled
2	Off	00H	<0>	Paper roll end sensor disabled
	On	04H	<4>	Paper roll end sensor enabled
3	Off	00H	<0>	Paper roll end sensor disabled
	On	08H	<8>	Paper roll end sensor enabled
4-7	-	-	-	Undefined

Table 41 Paper Sensor Commands

Function	**Enable print suppress and data pass through**
ASCII	[ESC] < <n>
Hexadecimal	1BH 3CH <n>
Decimal	<27> <60> <n>
IPCL	&%PT <n>
EPOS	[ESC] = <n>
Description	The [ESC] < <n> command provides print suppress and data pass through features.
Where	Bit 0 — Printer select Bit 1 — Pass through On Bits 2 - 7 — Undefined If Bit 0 is clear, the printer stops processing data. If Bit 1 is set, the data is passed through the printer and sent out on the serial port.
Note 1	The pass through command is processed as part of print data. It is not processed until it is found in the input buffer by the print processor. It is not an immediate command. The printer must be on-line and ready to activate the command.
Note 2	If the printer is configured for parallel operation, the data is still pass through on the serial port. In most cases, the serial port, however, is not connected.
Note 3	The operation of the command can be altered by the print suppress configuration and requires that the pass through and print suppress functions be enabled in the configuration menu.
Note 4	When Series 50 Printer compatibility is being used, these commands do not function. Series 50 Printer pass through must be used.
Note 5	Multi-drop is operational during suppress and pass through. If a multi-drop address is present in the pass through data, it is processed.

Function	**Set control feature commands**
ASCII	[ESC] y <n>
Hexadecimal	1BH 79H <n>
Decimal	<27> <121> <n>
IPCL	&%Y0-9 or &%YX <m_1> <m_2> <m_3> (for numbers greater than nine)
EPOS	[ESC] y <n>
Where n	0 Reinitializes the printer and forces Citizen mode 1 Reinitializes the printer and forces Star mode 2 Reinitializes the printer and forces POSjet®1500 mode 3 Reinitializes the printer and forces extended EPOS mode 4 Disables IPCL commands 5 Enables IPCL commands 6 Disables inquire processing (All command preprocessing is disabled.) 7 Enables inquire processing 8 Enables extended diagnostics 9 Print Current Configuration 10 Not used 11 Overlays the current character chart with Group 2 OCR MA Characters 12 Replaces the OCR characters with normal characters 13 Not used 14 Forces head maintenance 15 Print Current totals 16 Enable Test Font 17 Requests the printer to enter remote OFF. 18 Requests the printer to exit remote OFF. 20 Print alignment settings
Description	The [ESC] y <n> command enables and disables command set features. It is possible that the IPCL commands will interfere with print data. If this occurs, the IPCL can be disabled with an [ESC] y <4> command.
Note 1	Once IPCL commands are disabled, the Enable IPLC command will not be a valid IPCL code.
Note 2	[ESC] y <0>, <1>, <2>, and <3> allow the printer to switch between emulation modes. When the switch takes place, the current print buffer is printed, and the printer reinitializes. These commands do not permanently change the configuration. A power on reset restores the mode that was configured in menu mode. A reset by command or from the INIT pin does not restore the mode.
Note 3	[ESC] y <6> and <7> enable and disable the inquire process. These commands are not processed as they are received, but are buffered then processed. The buffering process allows inquire commands sent after a disable to be answered. In addition, inquires sent after an enable may not be answered. (See additional notes 3 and 4 on the next page).
Note 4	The printer has a resident OCR-MA font. It is defined and mapped per ANSI X3.111-1986. Once mapped into a code page, it can be removed by issuing an [ESC] y <12> command or a code-page select command.
Note 5	In EPOS mode, the [ESC] y command is active.

Function	Extended Configuration and Control
ASCII	[ESC] ~ <n>
Hexadecimal	1BH 7EH <n>
Decimal	<27> <126> <n>
IPCL	none
EPOS	[ESC] ~ <n>
Description	The [ESC] ~ <n> commands are extended diagnostics commands. They must all be preceded with an enabling command. These commands (in general) are not intended to be used by the end user.

Remote Power Control

The POSjet® 1500 Printer has a remote power control command that instructs it to enter STANDBY/OFF mode. When the command is issued, the printer performs print cartridge maintenance and enters STANDBY/OFF. Unlike pushing the * Button, remote power mode leaves the communications active. All commands except the exit power down command are ignored.

Function	Remote Power Control
ASCII	[ESC] y <n>
Hexadecimal	1BH 79H <n>
Decimal	<27> <121> <n>
IPCL	&%YX17 or &%YX18
EPOS	[ESC] y <n>
Where n	17 Requests the printer to enter remote STANDBY/OFF mode. 18 Requests the printer to exit remote STANDBY/OFF mode.
Description	Inquiry (ENQ) commands are accepted and answered in remote power down mode. The printer reactivates if the * Button is pressed or a power up command is received.
Note 1:	If power is lost after the power down command is issued, the printer remembers it is in power down mode but does not reactivate the communications link. The * Button must be pushed to return the printer to full operation.
Note 2:	This command is not available in STAR mode.

Documented Extended Control commands

The POSjet® 1500 has a number of Extended control commands designed to make operation and maintenance of the printer easier for the host application refer to the POSjet® Extended Control discussion on page 271.

Function	**Enable dynamic response**
ASCII	[ESC] w <n>
Hexadecimal	1BH 77H <n>
Decimal	<27> <119> <n>
IPCL	none
EPOS	[GS] a <n>
Where n	Defines the features that cause dynamic responses

Where Bit	0	Cash Drawer 0	ACK/NAK <1>
	1	Cash Drawer 1	ACK/NAK <2>
	2	Paper low status	ACK/NAK <3>
	3	Paper out status	ACK/NAK <4>
	4	0	
	5	0	
	6	Mechanical Error Status	ACK/NAK <14>
	7	Cover status	ACK/NAK <8>

Description Dynamic status can be used to allow the host to sense status changes without sending repeated inquire commands. The operation of the dynamic response varies depending on the configuration of the printer. If the printer is configured for serial or USB operation the status is automatically returned to the host. If the printer is configured for parallel, IEEE 1284 operation, the HOST must initiate a reverse channel request to return the status.

Note: For Mechanical Error Status to function, the "Buffer Full Only" off line option should be selected.

Function	**Begin multi-drop control**
ASCII	[SOH] <n>
Hexadecimal	01H <n>
Decimal	<1> <n>
IPCL	none
Where <n>	is the printer address. Addresses of A, B, or C are configurable.

Description The printer must be addressed in multi-drop mode. [SOH] <n> is the addressing command. If the printer is configured with an address of ‘A,’ it operates when addressed. When any other address is sent to the printer, it enters print suppress mode. An address of ‘Z’ is n universal address that activates the printer.

Printer Status

Status Inquire

The POSjet® 1500 Printer is designed for use as part of an automated system where the host computer makes every attempt to correct problems with the printer. In addition, the host application requires that it be able to obtain more information from the printer than is typical of normal computer printers. For example, a normal computer printer does not have cash drawers, such additional features require that the standard printer protocol be extended to deal with the added features of a point-of-sale (POS) printer.

All inquire commands are processed as they are received (preprocessed or real time) and require a response from the printer. Consequently, parallel, IEEE 1284 bidirectional communications, USB or bidirectional serial operation is required.

The POSjet®1500 Printer looks at and evaluates all commands as they are received and does not respond to Inquire commands that happen to be embedded in graphics or other commands. (Refer to the buffer and preprocessor descriptions in later sections.

In all cases, inquire commands are responded to by an acknowledged (ACK) or a not acknowledged (NAK) and then the command ID, which allows the host application to make multiple requests and receive identifiable responses. If the printer is configured for serial or USB operation the status is automatically returned to the host. If the printer is configured for parallel, IEEE 1284 operation, the HOST must initiate a reverse channel request to return the status.

Serial and USB Mode Inquire

All inquire (ENQ) commands require a response from the printer. During serial operation, all inquire commands are responded to by an acknowledged (ACK) or not acknowledged (NAK), the command ID, and in some cases status. Most status responses sequences contain a length field to help decode and separate responses.

In general the printer should be configured for “Buffer Full Only” Off Line operation if Inquire commands are used. This prevents the printer from using flow control for anything but buffer full. The programmer must take on the responsibility for assuring that Inquire commands are used to maintain status of the printer.

The printer always accepts serial data even when it is off-line. The printer has reserve buffer space that allows additional information to be received even if the printer is signaling buffer full or off-line. Because inquire commands are processed before they go into the buffer, the printer responds even when it is busy printing.

In serial mode, it is desirable that the response to an inquiry be received by the host before another inquire command is issued to the printer. When the printer receives an inquiry, it generates a response. If inquiries are sent to the printer too quickly, the printer spends all of its time responding and does not have time to print.

IEEE 1284 Mode Inquire

In parallel, IEEE 1284 mode, status information can be returned to the host through the IEEE 1284 reverse channel. After the host makes an inquire request, it activates IEEE 1284 mode 0 reverse channel and waits for a response from the printer. The response to the inquire is identical to serial mode in format.

The printer always accepts IEEE 1284 reverse-channel requests but does not accept inquire commands when off-line. It is possible to obtain status when off-line by placing the printer in dynamic response mode before the printer goes off-line. The IEEE 1284 reverse channel responds to status changes even when the printer is off-line.

In general the printer should be configured for “Buffer Full Only” Off Line operation if Inquire commands are used. This prevents the printer from using flow control for anything but buffer full. The programmer must take on the responsibility for assuring that Inquire commands are used to maintain status of the printer.

Dynamic Response Mode

Dynamic status, [ESC] w <n>, can be used to allow the host to sense status changes without sending repeated inquire commands. The dynamic response operation varies depending on the configuration of the printer. If the printer is configured for serial, USB, or IEEE 1284 operation, more than one status can be sensed because the printer responds to status changes as if an inquire were issued. The response to dynamic status is the same as an inquire command. That is, if cash drawer status is to be sensed, the ACK/NAK is the same as for inquire commands.

Inquire Commands

Function	**Inquire printer status**	
ASCII	[ENQ] <n>	
Hexadecimal	05H <n>	
Decimal	<5> <n>	
IPCL	none	
EPOS	[GS] r or [DLE] [ENQ] or [DLE] [EOT]	
Description	The [ENQ] <n> command inquires about the printer’s status and returns a result.	
Note 1	When the printer is off-line, inquires may not be accepted	

Function	**Inquire Cash Drawer 1 status**	
ASCII	[ENQ] <1>	
Hexadecimal	05H 01H	
Decimal	<5> <1>	
Function	Cash Drawer 1 Status	
Response	ACK <1> (06H 01H)	Cash Drawer 1 is closed.
	NAK <1> (15H 01H)	Cash Drawer 1 is open.
	Cash drawer status is defined as open circuit being drawer closed.	

Function	**Inquire receipt paper low status**	
ASCII	[ENQ] <3>	
Hexadecimal	05H 03H	
Decimal	<5> <3>	
Function	Receipt paper low	
Response	ACK <3> (06H 03H)	Receipt paper is present.
	NAK <3> (15H 03H)	Receipt paper is low.

Function	**Inquire receipt paper out status**	
ASCII	[ENQ] <4>	
Hexadecimal	05H 04H	
Decimal	<5> <4>	
Function	Receipt paper exhausted	
Response	ACK <4> (06H 04H)	Receipt paper is present
	NAK <4> (15H 04H)	Receipt paper is exhausted

Function	**Inquire cover open status**	
ASCII	[ENQ] <8>	
Hexadecimal	05H 08H	
Decimal	<5> <8>	
Function	Cover open/closed status	
Response	ACK <8> (06H 08H)	The cover is closed
	NAK <8> (15H 08H)	The cover is open

Function	**Is the buffer empty? Clear the IEEE 1284 buffer.**	
ASCII	[ENQ] <9>buffer, Clearing	
Hexadecimal	05H 09H	
Decimal	<5> <9>	
Function	The [ENQ] <9> command allows the host to know when the print buffer is empty. If IEEE 1284 is active, the command also clears the response buffer.	
Response	ACK <9> (06H 09H)	The buffer is empty.
	NAK <9> (15H 09H)	The buffer is not empty.

Function	**Request printer reset**
ASCII	[ENQ] <10>
Hexadecimal	05H 0AH
Decimal	<5> <10>
Function	Reset printer
Response	Serial / Parallel ACK <10> (06H 0AH) / No response The command was accepted. NAK <10> (15H 0AH) The command was rejected.
Description	The ENQ <10>, EPOS DLE ENQ <n> commands and the INIT pin all have the same effect and are referred to as reset commands. To prevent data loss, the printer tries to finish printing the buffered data. When operator intervention with the printer is required for any reason, data loss results. The reset operation is saved until the printer goes idle. In the case of a slip request command or any command that waits for the operator, the printer is idle. If the printer is idle and a reset command is received or pending, the printer resets, and the buffer clears. If the host resets an operator intervention operation, any remaining buffered data is cleared. When the printer receives a reset command, the printer goes off-line and/or busy until the reset completes. In serial mode, the printer may have information in its high-speed buffer that was received after the reset command but before the reset was processed. If the host application continues to send information to the printer after a reset command, some of that information may be processed before the reset is processed. In parallel mode, the printer goes busy after the reset is received but before the next byte is accepted. The printer accepts an [ENQ] <10> in parallel mode. It, however, is not acknowledged. If both the serial and parallel ports are active, the serial reset is not acknowledged either because the reset operation removes the parallel response. In IEEE 1284 mode, the response buffer is cleared by a reset command, which prevents responses in IEEE 1284 mode as well.
Note 1	If reset inhibit is set in the configuration menu, the command is ignored.

Function	**Inquire power cycle status**
ASCII	[ENQ] <11>
Hexadecimal	05H 0BH
Decimal	<5> <11>
Function	Has the printer been power cycled since the last request?
Response	ACK <11> (06H 0BH) Printer has been power cycled since the last [ENQ] <11> NAK <5> (15H 0BH) Printer has not power cycled since the last [ENQ] <11>
Description	The first time after a reset, the command returns [ACK] <11>, after that the command returns [NAK] <11>. The command allows the application to determine if the printer has been power cycled and needs to be reinitialized. The [ENQ] <10> command and the INIT signal on the parallel port both cause the printer to return power up status.

Function	**Inquire Mechanical error status**
ASCII	[ENQ] <14>
Hexadecimal	05H 0EH
Decimal	<5> <14>
Function	Error status
Response	ACK <14> (06H 0EH) No Mechanical Errors NAK <14> (15H 0EH) Mechanical Error Has Occurred (Use [ENQ]<22> to identify the error)
NOTE:	For this status request to function, the "Buffer Full Only" off line option should be selected.

Function	**Inquire printer state**
ASCII	[ENQ] <15>
Hexadecimal	05H 11H
Decimal	<5> <15>
Function	The [ENQ] <15> command returns the current printer state
Note	[ENQ] <17> also returns the current printer state, but it should not be used as it conflicts with XON/XOFF flow control.
Response	[ACK] <15> <n> <r_1> <r_2>…
Where	**<15>** is the echo of the command ID.
<n>	is the number of return bytes + 40 (28H) (to prevent confusion with XON/XOFF).
<r_1>:	bit 0 = 1 always bit 1 = Cover is closed. bit 2 = Receipt paper is out. bit 3 = 0 bit 4 = Printer is waiting in an error mode. Use [ENQ]<22> to identify the specific error and [ENQ]<10> to recover bit 5 = 0 bit 6 = 1 always bit 7 = 0 always
<r_2>:	bit 0 - 5 = 0 always bit 6 = 1 always bit 7 = 0 always
Note:	For this status request to function, the "Buffer Full Only" off line option should be selected.

Function	**Inquire all printer status**
ASCII	[ENQ] <20>
Hexadecimal	05H 14H
Decimal	<5> <20>
Function	The [ENQ] <20> command returns all status flags
Response	[ACK] <20> <n> <r_1> <r_2>…
Where	**<20>** is the echo of command ID.
<n>	is the number of return bytes + 40 (28H) (to prevent confusion with XON/XOFF).
<r_1>:	bit 0 = Cash Drawer 1 is open. bit 1 = Cash Drawer 2 is open bit 2 = Receipt paper is out. bit 3 = 0 bit 4 = Receipt paper error occurred. (low or out) bit 5 = 0 bit 6 = 1 always bit 7 = 0 always
<r_2>:	bit 0 = 1 always bit 1 = Cover is closed. bit 2 = Buffer is empty. bit 3 = Printer has been power cycled, Reading this does not affect the state of the power-cycled flag. (Use [ENQ] <11> to reset the power cycled bit.) bit 4 = Printer is waiting in an error mode. Use [ENQ]<22> to identify the specific error and [ENQ]<10> to recover bit 5 = 0 bit 6 = 1 always bit 7 = 0 always
<r_3>:	bit 0 = Receipt station selected bit 1 = Top validation station selected bit 2 = Undefined bit 3 = Waiting for form bit 4 = Undefined bit 5 = Printer is blocking print (Cover is open or out of paper.) bit 6 = 1 always bit 7 = 0 always
<r_4>:	bit 0 = Printer supports receipts. bit 1 = Printer supports inserted forms. bit 2 = Printer supports multiple colors bit 3 = Printer supports cutter. bit 4 = Printer supports partial cuts. bit 5 = 0 bit 6 = 1 always bit 7 = 0 always
<r_5>:	Percentage of ink remaining on Head 1 (0-100) + 40 (28H)
<r_6>:	Percentage of ink remaining on Head 2 (0-100) + 40 (28H)
<r_7>:	Current multi-head alignment (0-16, 8 = 0 offset)

Function	**Inquire printer ID**
ASCII	[ENQ] <21>
Hexadecimal	05H 15H
Decimal	<5> <21>
Function	The [ENQ] <21> command returns the printer IEEE 1284 ID string.
Response	[ACK] <21> <n> {ID string}
Where <21>	is the echo of the command ID and <n> is the number of return bytes in the ID string {ID string} is the IEEE ID return string, which follows:

MFG:Ithaca-Periph.;
CMD:PJ1000CL,IPCL;
CLS:PRINTER;
MDL:1000 PcOS;
DES:Ithaca-Peripherals POSjet®1500;
REV:PE1200-01.16
OPTS:$20xy

Where x is a bit field defined as follows:
bit 0 = 1 Red pen support
bit 1 = 1 Green pen support
bit 2 = 1 Blue pen support
bit 3 = Always 0
bit 4 = Always 1
bit 5 = Always 1
bit 6 = Always 0
bit 7 = Always 0

The y is a bit field defined as follows:
bit 0 = 0
bit 1 = Knife is installed.
bit 2 = 0
bit 3 = Always 0
bit 4 = Always 1
bit 5 = Always 1
bit 6 = Always 0
bit 7 = Always 0

Function	**Inquire Error status**
ASCII	[ENQ] <22>
Hexadecimal	05H 17H
Decimal	<5> <22>
Function	The [ENQ] <22> command reports on the error status.
Response	[ACK] <22> <n> <r>
Where	**<22>** is the echo of the command ID.
<n>	is the number of return bytes + 40 (28H) (to prevent confusion with XON/XOFF).
<r_1>:	bit 0 = Cover is open. bit 1 = Receipt Paper is Low bit 2 = Receipt paper is out. bit 3 = Ink is Low (This is set if either cartridge is low) bit 4 = Either or Both Cartridges are removed. bit 5 = The Auto-Cutter has faulted. bit 6 = 1 always bit 7 = An serious error has occurred.
Note 1:	If bit 7 is set, a serious error has occurred. The printer is not able to recover from type of an error without operator intervention. If bit 7 is set without bit 5 (Auto-cutter fault) the print carriage has faulted. This is probably caused by a paper jam or a component failure. The host system may issue an [ENQ]<10> (Reset Request command) to attempt to recover. The Reset Request will reset the printer to an initial power up state. All data will be lost.
Note 2:	When a serious error occurs (bit 7 set) the printer enters a static state. Status responses will reflect the state of the printer when the error occurred.
Note 3:	For this status request to function during a serious error, the "Buffer Full Only" off line option should be selected.

Function	**Inquire user-store status**
ASCII	[ENQ] <23>
Hexadecimal	05H 17H
Decimal	<5> <23>
Function	The [ENQ] <23> command reports on the user-store status.
Response	[ACK] <23> <Report> <0>
Where <23>	is the echo of command ID. The report is a null terminated string with the following format: 12345[CR][LF] (Free user store) 12345 Type Name…[CR][LF] (First entry) etc. 12345 Type Name…[CR][LF] (Last entry) <0>
Type	The type field describes the type of information. M = macro C = character definition

Function	**Inquire Color status**
ASCII	[ENQ] <24>
Hexadecimal	05H 18H
Decimal	<5> <24>
Function	The [ENQ] <24> command reports Color Cartridge status.
Response	[ACK] <24> <Length+40><n_1><n_2><n_3>
Where <24>	Is the echo of command
<n_1>	Secondary Pen Color 0 = Not installed, 1 = Red, 2 = Green, 4 = Blue
<n_2>	Primary Pen Color 1 = Red, 2 = Green, 4 = Blue 16 = Black
<n_3>	Pen Status bit 0 = Not defined bit 1 = Not defined bit 2 = Secondary Cartridge not installed bit 3 = Primary Cartridge not installed bit 4 = Secondary Cartridge low on ink. bit 5 = Primary Cartridge low on ink. bit 6 = 1 always bit 7 = 0 always

Series 50 Compatibility Commands[22]

To allow the POSjet® 1500 Printer to replace the Series 50 Printer without affecting the Series 50 application, the most popular Series 50 emulation modes are provided. The Series 50 modes should only be used if you are replacing a Series 50 Printer and cannot modify the application to use the standard POSjet® 1500 commands.

A number of items are different with the POSjet® 1500 emulation, including the processing of IPCL commands. The Series 50 IPCL processor did not deal with command parameters by translating ASCII digits into binary field. When a POSjet® 1500 Printer is in Series 50 mode, it behaves as the Series 50 Printer does.

The primary changes to the standard POSjet® 1500 emulation are the removal of commands not present on the Series 50 Printer and the addition of the following commands which are only present on the Series 50 Printer. Refer to the Series 50 Programmer's Guide for documentation and additional commands.

Function	**Set extended Series 50 cash drawer command**
ASCII	[BS]
Hexadecimal	08H
Decimal	<8>
Description	The [BS] command opens Cash Drawer 2

Function	**Set extended Series 50 cash drawer command**
ASCII	[BEL]
Hexadecimal	07H
Decimal	<7>
Description	The [BEL] command opens Cash Drawer 1

Function	**Set extended Series 50 cash drawer command**
ASCII	[ESC] +
Hexadecimal	1BH 2BH
Decimal	<27> <43>
Description	The [ESC] + command opens Cash Drawer 1

Function	**Set extended Series 50 pass through**
ASCII	[ESC] # or [ESC] d or [ESC] [RS] and [ESC] ”
Hexadecimal	1BH 23H or 1BH 64H or 1BH 1EH and 1BH 22H
Decimal	<27> <35> or <27> <100> or <27> <30> and <27> <34>
Description	[ESC] # or [ESC] d turn on pass through, and [ESC] [RS] or [ESC] ” turn off pass through. These commands require that the pass through function be enabled in the configuration menu.

[22] Some Versions of the POSjet® 1500 printer do not support the M50 emulation.

ESC/POS™ Codes

The EPOS codes that are supported by the POSjet® 1500 Printer are listed in this section. TransAct Technologies, Inc. has no control over how Epson extends or changes these control codes. TransAct Technologies, Inc. makes no guarantees as to the operation of our printer when it replaces an Epson printer. The TM-U325D and EPOS emulations are intended to make it as easy as possible to replace an Epson printer with a POSjet®1500 Printer.

The POSjet® 1500 Printer provides two Epson emulations. The first emulation is as close as possible to the TM-U325D Printer and tries to make the POSjet® 1500 Printer a drop in replacement. However, when the POSjet® 1500 Printer is in Epson TM-U325D emulation mode, it is subject to the same limitations as a TM-U325D Printer.

The second Epson emulation is EPOS mode. It extends and enhances the TM-U325D emulation to remove some of the restrictions and give access to some of the POSjet® 1500 Printer features not addressed by the TM-U325D. It is intended that the standard Ithaca® PcOS emulation be used for new applications.

The following section lists all TM-U325D and EPOS commands that are processed. They are as close as possible to Epson's definitions. The user must remember that the POSjet® 1500 EPOS emulation, unlike the TM-U325D emulation, is not designed as a drop in replacement for an Epson printer. The POSjet® 1500 Printer is designed to bring new and unique features and functionalities to a point-of-sale receipt printer. These features are not always compatible with Epson printers. Not all features of POSjet® 1500 Printers can be supported by EPOS. In particular, the ability to print color graphics is not supported. Epson has not yet defined any way to print color graphics.

Differences between Epson TM U325D and POSjet® 1500

In a few minor ways, the operation and programming POSjet® 1500 is not identical to a TM U325D.

Validation

The TMU325D has a fixed validation depth, the POSjet® 1500 has an adjustable validation depth. To assure compatibility between the POSjet® 1500 and the TMU325D, you should set this depth to the default of 1.5 inches. The POSjet® 1500 loads validation forms differently than the TMU325D. The POSjet® 1500 checks form alignment after a load and may reject the form and ask the operator to reload it

Manual Validation.

The TMU325D can perform manual validation by pressing the Release button, inserting a form and them sending data to the printer. The information is printed on the inserted form and if there is self-printing paper in the receipt, the same information is printed on the receipt. The POSjet® 1500 has an auto-journal mode that will allow the POSjet® 1500 to repeat any validation information on the receipt tape. In many ways this is an improvement over the TMU325D, however it is different. This mode is configurable. It can be disabled, enabled b command only or on by default. How you set this configuration will depend on how the POSjet® 1500 is used in your application.

EPOS Deviations

Several differences exist between the POSjet® 1500 and Epson printers. The POSjet® 1500 Printer and TM-U325D have fundamentally different print technology. The dot pitch and cell size of the printers will also vary. The POSjet® 1500 Printer tries to duplicate the TM-U325D functionality, but it is not always possible. For example, the downloaded characters print smaller on a POSjet® 1500 Printer than a TM-U325D.

Undocumented Epson Commands

There are a number of undocumented commands in Epson printers. Where Transact is aware of these commands, they have been duplicated in the POSjet® 1500 Printer. The TM U325D printer has a number of commands that make it more compatible with the TM-U300. Transact can not guarantee that we have found all of these commands. If your application does not function correctly, it is possible that you are using some of these commands. If you find a command that we do not have, please contact Transact Customer support and we will try to give you a work around or we may implement the command for you.

Real-time Status

The POSjet® 1500 Printer is available in serial and parallel versions. Epson supports parallel operation but does it through a parallel to serial interface. Consequently, the response times for the POSjet® 1500 Printer are generally faster. The POSjet® 1500 Printer implements the IEEE 1284 nibble-mode standard. If an application requires real-time status from the printer, the IEEE 1284 bidirectional protocol must be used. Epson supports the IEEE 1284 byte-mode standard but seems to have errors in the nibble mode. The POSjet® 1500 Printer does not support byte mode. If the POSjet® 1500 Printer is used in an IEEE 1284 compliant system, byte mode should be an extension and the default should be nibble mode.

The POSjet® 1500 Printer supports the EPOS real-time status commands [DLE] [ENQ] and [DLE] [EOT] and are preprocessed by the printer. The printer supports all the response bit fields as defined by the TM-U325D Printer. See the descriptions below. The POSjet® 1500 Printer looks at and evaluates all commands as they are received and does not respond to [DLE] [ENQ] or [DLE] [EOT] commands that happen to be embedded in graphics or other commands. (Refer to the buffer and preprocessor descriptions in later sections.)

Supported TM-U325D Commands

Print and Feed Commands			
Command		**Name**	**Page**
LF	0AH	Print and line feed.	220
CR	0DH	Print and carriage return.	220
ESC d	1BH,64H	Print and feed <n> lines.	220
ESC e	1BH,65H	Print and reverse feed <n> lines.	220
ESC J	1BH,4AH	Print and feed paper <n> vertical units.	221
ESC K	1BH,4BH	Print and reverse feed [<n> x (1/144)] inches.	221
Line Spacing Commands			
Command		**Name**	**Page**
ESC 2	1BH,32H	Select default line spacing, 1/6 lpi.	222
ESC 3	1BH,33H	Set line spacing.	222
ESC D		Set horizontal tab positions.	234
HT		Set horizontal tab.	233
Character Commands			
Command		**Name**	**Page**
ESC SP	1BH,20H	Set right-side character spacing.	222
ESC %	1BH,25H	Select/cancel user-defined character sets.	222
ESC &	1BH,26H	Define user-defined characters.	223
ESC ?	1BH,3FH	Cancel user-defined characters.	223
ESC R	1BH,52H	Select an international character set.	223
ESC [T	1BH,5BH, 54H	Select character code table.	225
ESC r	1BH,72H	Select color.	227
ESC t	1BH,74H	Select character code table.	227
ESC !	1BH,21H	Select print mode(s).	228
ESC -	1BH,2DH	Turn underline mode on/off.	228
ESC E	1BH,45H	Turn emphasized mode on/off.	228
ESC G	1BH,47H	Turn double-strike mode on/off.	229
ESC {	1BH,7BH	Turn upside-down printing mode on/off.	229
Panel Button Commands			
Command		**Name**	**Page**
ESC c 5	1BH,63H, 35H	Enable/disable panel buttons.	230

Supported TM-U325D Commands

Paper Sensor Commands			
Command		**Name**	**Page**
ESC c 4	1BH,63H, 34H	Select paper sensor(s) to stop printing.	231
ESC c 3	1BH,63H, 33H	Select paper sensor(s) to output paper end signals.	232
ESC c 1	1BH, 63H, 31H	Select paper types for command settings	231
ESC c 0	1BH, 63H, 30H	Select paper types for printing	242
Print Position Commands			
Command		**Name**	**Page**
ESC a	1BH,61H	Select justification.	233
HT	09H	Set horizontal tab positions.	233
ESC D	1BH,44H	Set horizontal tab positions.	234
ESC U	1BH,55H	Turn unidirectional printing mode on/off.	234
ESC <	1BH,3CH	Return home.	235
Bit-image Command			
Command		**Name**	**Page**
ESC *	1BH,2AH	Select bit-image mode.	235
Status Command			
Command		**Name**	**Page**
GS a	1DH,61H	Enable/disable Automatic Status Back (ASB).	236
GS r	1DH,72H	Transmit status.	238
DLE EOT	10H,04H	Transmit real-time status.	239
Mechanism Control Commands			
Command		**Name**	**Page**
GS V	1DH,56H	Select cut mode and cut paper.	247
Miscellaneous Commands			
Command		**Name**	**Page**
ESC @	1BH,40H	Initialize printer.	248
GS I	1DH,49H	Transmit printer ID.	248
ESC p	1BH,70H	Generate pulse.	249
ESC =	1BH,3DH	Select peripheral device status.	249
DLE ENQ	10H,05H	Query real-time request to printer.	249
ESC %		Select/cancel user-defined character set.	222
ESC &	.	Define user-defined characters	223
ESC ?	.	Cancel user-defined characters	223

Table 42 Supported TM-U325D Commands

Undocumented TM U325D Commands

Command	Name	
ESC i	Auto-Cut	247
ESC m	Auto Cut	247
ESC u	Transmit Peripheral Device Status	241
ESC v	Transmit Paper status	242
GS (A	Enter Test Mode	250

Table 43 Undocumented TM U325D Commands

Supported EPOS Commands

Print and Feed Commands			
Command		**Name**	**Page**
LF	0AH	Print and line feed.	220
CR	0DH	Print and carriage return.	220
ESC d	1BH,64H	Print and feed <n> lines.	220
ESC e	1BH,65H	Print and reverse feed <n> lines.	220
ESC J	1BH,4AH	Print and feed paper <n> vertical units.	221
ESC K	1BH,4BH	Print and reverse feed [<n> x (1/144)] inches.	221
ESC j	1BH,6AH	Print and reverse feed.	221
Line Spacing Command			
Command		**Name**	**Page**
ESC 2	1BH,32H	Select default line spacing, 1/6 lpi.	222
ESC 3	1BH,33H	Set line spacing.	222
Character Commands			
Command		**Name**	**Page**
ESC SP	1BH,20H	Set right-side character spacing.	222
ESC %	1BH,25H	Select/cancel user-defined character sets.	222
ESC &	1BH,26H	Define user-defined characters.	223
ESC ?	1BH,3FH	Cancel user-defined characters.	223
ESC R	1BH,52H	Select an international character set.	223
ESC [T	1BH,5BH, 54H	Select character code table.	225
ESC ^	1BH,5EH	Print control character.	227
GS #	1DH,23H	Insert Euro character.	227
ESC r	1BH,72H	Select color.	227
ESC t	1BH,74H	Select character code table.	227
ESC !	1BH,21H	Select print mode(s).	228
ESC -	1BH,2DH	Turn on/off underline mode.	228
ESC G	1BH,47H	Turn on/off double-strike mode.	229
ESC {	1BH,7BH	Turn on/off upside-down printing mode.	229
ESC V	1BH,56H	Turn on/off 90° rotation mode.	229
GS !	1DH,21H	Set character size.	230
ESC 4	1BH,34H	Set italics mode.	230
ESC 5	1BH,35H	Reset italics mode.	230
Panel Button Commands			
Command		**Name**	**Page**
ESC c 5	1BH,63H, 35H	Enable/disable panel buttons.	230

Table 44 Supported EPOS Commands

Supported EPOS Commands

Paper Sensor Commands			
Command		**Name**	**Page**
ESC c 4	1BH,63H, 34H	Select paper sensor(s) to stop printing.	231
ESC c 3	1BH,63H, 33H	Select paper sensor(s) to output paper end signals.	232
ESC c 1	1BH, 63H, 31H	Select paper types for command settings	242
ESC c 0	1BH, 63H, 30H	Select paper types for printing	242
Print Position Commands			
Command		**Name**	**Page**
ESC $	1BH,24H	Set absolute print position.	233
ESC \	1BH,5CH	Set relative print position.	233
ESC a	1BH,61H	Select justification.	233
BS	08H	Set back space.	233
HT	09H	Set horizontal tab positions.	233
ESC D	1BH,44H	Set horizontal tab positions.	234
GS L	1DH,4CH	Set left margin.	234
GS W	1DH,57H	Set printing width.	234
ESC U	1BH,55H	Turn on/off unidirectional printing mode.	234
ESC l	1DH,6CH	Set left margin.	234
ESC Q	1BH,51H	Set right margin in characters.	235
ESC <	1BH,3CH	Return home.	235
Bit-image Commands			
Command		**Name**	**Page**
ESC *	1BH,2AH	Select bit-image mode.	235
Status Commands			
Command		**Name**	**Page**
GS a	1DH,61H	Enable/Disable Automatic Status Back (ASB).	236
GS r	1DH,72H	Transmit status.	238
DLE EOT	10H,04H	Transmit real-time status.	239

Supported EPOS Commands

Bar Code Commands			
Command		**Name**	**Page**
GS h	1DH,68H	Set bar code height.	244
GS k	1DH,6BH	Print bar code.	244
GS H	1DH,48H	Select printing position of HRI characters.	245
GS f	1DH,66H	Select font HRI characters.	246
Mechanism Control Commands			
Command		**Name**	**Page**
GS V	1DH,56H	Select cut mode and cut paper.	247
ESC i	1BH,69H	Set partial knife cut.	247
ESC m	1BH,69H	Set partial knife cut.	247
BEL	07H	Sound buzzer.	247
ESC BEL	1BH,07H	Sound buzzer.	247
[FS] a 1	1CH,61H 31H	Load Check for Processing	247
Miscellaneous Commands			
Command		**Name**	**Page**
GS P	1DH,50H	Set horizontal and vertical motion units.	248
ESC @	1BH,40H	Initialize printer.	248
GS I	1DH,49H	Transmit printer ID.	248
ESC p	1BH,70H	Generate pulse.	249
ESC =	1BH,3DH	Select peripheral device status.	249
DLE ENQ	10H,05H	Send real-time request to printer.	249
ESC u	1BH, 75H	Transmit Peripheral Status	241
ESC v	1BH, 76H	Transmit Paper Status	242
GS (A	1DH, 28H,41H	Enter Test Mode	250
Macro Function Commands			
Command		**Name**	**Page**
GS :	1DH,3AH	Start/end macro definition.	251
GS ^ r t m	1DH,5EH	Execute macro.	251
GS _	1DH,5FH	Delete start-up macro definition.	252
User-defined Memory Commands			
Command		**Name**	**Page**
GS - <Name> …	1DH,2DH, <Name> …	Define user-defined bit image.	253
GS 0 <Name> …	1DH,30H, <Name> …	Print user-defined bit image.	254
GS 1 <Name> …	1DH,31H, <Name> …	Erase single entry from nonvolatile memory.	254
GS 5	1DH,35H	Erase all entries from nonvolatile memory.	254
GS *	1DH,2AH	Define single user-defined bit-image.	255
GS /	1DH,2FH	Print single user-defined bit-image.	256
GS 6	1DH,36H	Save user-defined character set.	256
GS 7	1DH,37H	Select user-defined character set.	256
GS 3	1DH,33H	Query nonvolatile memory pool information.	256

TM-U325D and EPOS Command Descriptions

The TM-U325D and EPOS emulations are grouped together. The TM-U325D emulation is a subset of the EPOS emulation. The EPOS only commands are noted.

Print and Feed Commands

Function	**Print and line feed**
ASCII	[LF]
Hexadecimal	0AH
Decimal	<10>
Description	The [LF] command prints the data in the print buffer and feeds one line. The amount of paper fed per line is based on the value set using the line spacing command. The default setting is 1/6 inch.

Function	**Print and carriage return**
ASCII	[CR]
Hexadecimal	0DH
Decimal	<13>
Description	When auto line feed is enabled, [CR] functions in the same way as [LF]. When auto line feed is disabled, [CR] prints the data in the print buffer and does not feed the paper.

Function	**Print and feed <n> lines**
ASCII	[ESC] d <n>
Hexadecimal	1BH 64H <n>
Decimal	<27> <100> <n>
Range	$0 \le n \le 255$
Description	The [ESC] d <n> command prints the data in the print buffer and feeds <n> lines. The amount of paper fed per line is based on the value set using the line spacing command. The maximum paper feed amount is 40 inches. The default setting of the paper feed amount is 1/6 inch.

Function	**Print and reverse feed<n> lines**
ASCII	[ESC] e <n>
Hexadecimal	1BH 65H <n>
Decimal	<27> <101> <n>
Range	$0 \le n \le 255$
Description	The [ESC] e <n> command prints the data in the print buffer and feeds <n> lines in the reverse direction. The amount of paper fed per line is based on the value set using the line spacing command. The maximum reverse paper feed amount is 48/144 inch. The default setting of the paper feed amount is 1/6 inch.

Function	**Print and feed paper**
ASCII	[ESC] J <n>
Hexadecimal	1BH 4AH <n>
Decimal	<27> <74> <n>
Range	0 ≤ n ≤ 255
Description	The [ESC] J <n> command prints the data in the print buffer and feeds the paper [n x (1/144)] inches, which means that the printer can feed the paper in half-dot units. The command is used to temporarily feed a specific length without changing the line spacing set by other commands.

Function	**Print and reverse feed <n> lines**
ASCII	[ESC] K <n>
Hexadecimal	1BH 4BH <n>
Decimal	<27> <75> <n>
Range	0 ≤ n ≤ 48
Description	The [ESC] K <n> command prints the data in the print buffer and feeds the paper [<n> x (1/144)] inches in the reverse direction. Consequently, the printer can feed the paper in half-dot units in the reverse direction. The command is used to temporarily feed a specific length without changing the line spacing set by other commands.

Function	**Print and reverse feed**	**EPOS ONLY**
ASCII	[ESC] j	
Hexadecimal	1BH 6AH	
Decimal	<27> <106>	
Range	0 ≤ n ≤ 48	
Description	The [ESC] j command prints the data in the print buffer and feeds the paper one line in reverse.	

Line Spacing Commands

Function	**Select default line spacing**
ASCII	[ESC] 2
Hexadecimal	1BH 32H
Decimal	<27> <50>
Description	The [ESC] 2 command sets the line spacing to 1/6 inch, which is equivalent to 12 dots.

Function	**Set line spacing**
ASCII	[ESC] 3 <n>
Hexadecimal	1BH 33H <n>
Decimal	<27> <51> <n>
Range	0 ≤ n ≤ 255
Description	The [ESC] 3 <n> command sets the line spacing to [<n> x (1/144)] inches. The default setting of the paper feed amount is 1/6 inch (<n> = 24). The line spacing can be set in half-dot units.

Character Commands

Function	**Set right-side character spacing**
ASCII	[ESC] SP <n>
Hexadecimal	1BH 20H <n>
Decimal	<27> <32> <n>
Range	0 ≤ n ≤ 255
Description	The [ESC] SP <n> sets the right-side character spacing in [<n> x (1/160)] inches. It is used to change the spacing between characters. The default right-side character spacing is set to zero. (<n> = 0). Right-side character spacing can be set in half-dot units.

Function	**Select/cancel user-defined character set**
ASCII	[ESC] % <n>
Hexadecimal	1BH 25H <n>
Decimal	<27> <37> <n>
Range	0 ≤ n ≤ 255
Description	The [ESC] % <n> command selects or cancels the user-defined character set. When the least significant bit (LSB) of <n> is one, the user-defined character set is selected. When <n> is zero, the internal character set is selected, which is the default setting.
Note 1	In TM-U325D mode, the command only functions if the buffer is set to 40 characters.

Function	**Define user-defined characters**
ASCII	[ESC] & <y> <c1> <c2> [x1 d1 … d(y x x1)] … [xk d1 … d(y x xk)]
Hexadecimal	1BH 26H y c1 c2 [x1 d1 … d(y x x1)] … [xk d1 … d(y x xk)]
Decimal	<27> <38> y c1 c2 [x1 d1 … d(y x x1)] … [xk d1 … d(y x xk)]
Range	y = 2 $32 \le c_1 \le c_2 \le 126$ $0 \le x \le 12$ (9 x 9 font) $0 \le x \le 9$ (7 x 9 font) $0 \le d_1 \ldots d(y\ x\ x) \le 255$
Description	The [ESC] & <y> <c_1> <c_2> [x_1 d_1 … d(y *x* x_1)] … [x_k d_1 … d(y *x* x_k)] command defines user-defined characters from character code <c_1> to <c_2>. <y> and <x> are the configurations of user-defined characters. <y> specifies the number of bytes in the vertical direction. <x> specifies the number of bytes in the horizontal direction. Character codes ranging from ASCII code 20H (32) to 7EH (126) can be defined by <c_1> and <c_2>. Up to 19 user-defined characters can be defined. Data (<d>) specifies a bit printed to one and not printed to zero. At the default, user-defined characters are not defined, and the internal character set is printed. Once the user-defined characters have been defined, they are available until [ESC] @ or [ESC] ? is executed; the user-defined characters are redefined; the power is turned off; or the printer is reset.
Note 1	In TM-U325D mode, the buffer must be set to 40 characters or the command will not function.

Function	**Cancel user-defined characters**
ASCII	[ESC] ? <n>
Hexadecimal	1BH 3FH <n>
Decimal	<27> <63> <n>
Range	$32 \le n \le 126$
Description	The [ESC] ? <n> command cancels the user-defined characters defined for character code <n>. After the user-defined characters are canceled, the internal character set is printed.
Note 1	In TM-U325D mode, the buffer must be set to 40 characters or the command will not function.

Function	**Select an international character set**
ASCII	ESC R <n>
Hexadecimal	1BH 52H <n>
Decimal	<27> <82> <n>
Range	$0 \le n \le 74$
Default	<n> = 0
Description	The ESC R <n> command selects an international character set, <n>, from the following table.

International Character Sets

Country	Epson ID	Country	Epson ID
ASCII	0	Greek 437	38
French	1	Greek 928	39
German	2	Greek 437 CYPRUS	41
British	3	ECMA-94	42
Danish I	4	Canada French	43
Swedish I	5	Cyrillic I-855	44
Italian	6	Cyrillic II-866	45
Spanish I	7	East Europe Latin II-852	46
Japanese	8	Greek 869	47
Norwegian	9	Windows East Europe	49
Danish II	10	Windows Greek	50
Spanish II	11	Latin 5 (Windows Turkey)	51
Latin American	12	Windows Cyrillic	52
French Canadian	13	Hungarian CWI	54
Dutch	14	Kamenicky (MJK)	55
Swedish II	15	ISO Latin 4 (8859/4)	56
Swedish III	16	Turkey_857	57
Swedish IV	17	Roman-8	58
Turkish	18	Hebrew NC (862)	60
Swiss I	19	Hebrew OC	61
Swiss II	20	Windows Hebrew	62
Cyrillic II-866	21	KBL- Lithuanian	63
Polska Mazovia	22	Ukrainian	66
ISO Latin 2	23	ISO Latin 6 (8859/10)	67
Serbo Croatic I	24	Windows Baltic	68
Serbo Croatic II	25	Cyrillic-Latvian	69
Multilingual	26	Bulgarian	72
Norway	27	Icelandic-861	73
Portugal	28	Baltic 774	74
Turkey	29	Arabic[23]	93

Table 45 International Character Sets

[23] Arabic is supported by special order

Function	**Select character code table**	**EPOS ONLY**
ASCII	ESC [T <n_h> <n_l>	
Hexadecimal	1BH 5BH 54H <n_h> <n_l>	
Decimal	<27> <91> <84> <n_h> <n_l>	
Default	<n_h> = 1	
<n_l> =	181 (Code Page 437)	
Description	The ESC [T <n_h> <n_l> command selects a code page, <n>, from the character code table.	

Code Page	Country	Decimal <nh> <nl>	Hex <nh> <nl>
64	USA (Slashed 0)	64	0H,040H
65	USA (Unslashed 0)	0,65	0H,041H
66	British	0,66	0H,042H
67	German	0,67	0H,043H
68	French	0,68	0H,044H
69	Swedish I	0,69	0H,045H
70	Danish	0,70	0H,046H
71	Norwegian	0,71	0H,047H
72	Dutch	0,72	0H,048H
73	Italian	0,73	0H,049H
74	French Canadian	0,74	0H,04AH
75	Spanish	0,75	0H,04BH
76	Swedish II	0,76	0H,04CH
77	Swedish III	0,77	0H,04DH
78	Swedish IV	0,78	0H,04EH
79	Turkish	0,79	0H,04FH
80	Swiss I	0,80	0H,050H
81	Swiss II	0,81	0H,051H
91	Welsh	0,91	0H,05BH
93	Arabic[24]	0,93	0H,05DH
437	USA	1,181	1H,0B5H
774	Baltic 774	3,6	3H,006H
850	Multilingual	3,82	3H,052H
852	East Europe Latin II-852	3,84	3H,054H
855	Cyrillic I-855	3,87	3H,057H
857	Turkey 857	3,89	3H,059H
858	Multilingual Euro	3,90	3H,05AH
860	Portugal	3,92	3H,05CH
861	Icelandic-861	3,93	3H,05DH
862	Hebrew NC (862)	3,94	3H,05EH
863	Canada French	3,95	3H,05FH
865	Norway	3,97	3H,061H

[24] Arabic is supported by special order.

Code Page	Country	Decimal <n_h> <n_l>	Hex <n_h> <n_l>
866	Cyrillic II-866	3,98	3H,062H
869	Greek 869	3,101	3H,065H
895	Kamenicky (MJK)	3,127	3H,07FH
1008	Greek 437	3,240	3H,0F0H
1009	Greek 928	3,241	3H,0F1H
1011	Greek 437 CYPRUS	3,243	3H,0F3H
1012	Turkey	3,244	3H,0F4H
1013	Cyrillic II-866	3,245	3H,0F5H
1014	Polska Mazovia	3,246	3H,0F6H
1015	ISO Latin 2	3,247	3H,0F7H
1016	Serbo Croatic I	3,248	3H,0F8H
1017	Serbo Croatic II	3,249	3H,0F9H
1018	ECMA-94	3,250	3H,0FAH
1019	Windows East Europe	3,251	3H,0FBH
1020	Windows Greek	3,252	3H,0FCH
1021	Latin 5 (Windows Turkey)	3,253	3H,0FDH
1022	Windows Cyrillic	3,254	3H,0FEH
1024	Hungarian CWI	4,0	4H,000H
1026	ISO Latin 4 (8859/4)	4,2	4H,002H
1027	Ukrainian	4,3	4H,003H
1028	Roman-8	4,4	4H,004H
1029	ISO Latin 6 (8859/10)	4,5	4H,005H
1030	Hebrew NC (862)	4,6	4H,006H
1031	Hebrew OC	4,7	4H,007H
1032	Windows Hebrew	4,8	4H.008H
1033	KBL- Lithuanian	4,9	4H,009H
1034	Windows Baltic	4,10	4H,00AH
1035	Cyrillic-Latvian	4,11	4H,00BH
1072	Bulgarian	4,48	4H,030H

Table 46 Character Code Pages

Function	**Print control character**	**EPOS ONLY**
ASCII	[ESC] ^ <n>	
Hexadecimal	1BH 5EH <n>	
Decimal	<27> <94> <n>	
Range	0 ≤ n ≤ 255	
Description	The [ESC] ^ <n> command allows characters from zero to 31 codes to be printed. During normal operation, characters from zero to 31 are control characters. Control code translation is turned off for the following character.	

Function	**Insert Euro character**	**EPOS ONLY**
ASCII	GS # <n>	
Hexadecimal	1DH 23H <n>	
Decimal	<29> <35> <n>	
Description	The GS # <n> command allows an application to replace any character in the currently active character set with the Euro character. The character to be replaced is defined by <n>. For example, if the currently active character set is CP 850 (multilingual) and the 0D5H character is to be the Euro character, 1DH 23H replaces the character at 0D5H with the Euro symbol.	

Function	**Turn color mode on/off**
ASCII	[ESC] r <n>
Hexadecimal	1BH 72H <n>
Decimal	<27> <114> <n>
Range	<n> = 0, 1, 48, 49
Description	The [ESC] r <n> command turns on or off color mode. When <n> = 1 or 49, color mode is turned on, and when <n> = 0 or 48, color mode is turned off. The default setting is <n> = 0.

Function	**Select character code table**
ASCII	[ESC] t <n>
Hexadecimal	1BH 74H <n>
Decimal	<27> <116> <n>
Range	0 ≤ n ≤ 5; <n> = 254, 255
Description	The [ESC] t <n> command selects a page, <n>, from the character code table as follows. The alphanumeric characters (20H to 7FH) are the same for each page. The graphic characters (80H to FFH) are different for each page. The default setting is page 0.

<n>	Character Code Table
0	Page 0 [PC437 (U.S.A. and Standard Europe)]
1	Page 1 [PC850 (Multilingual)]
2	Page 2 [PC850 (Multilingual)]
3	Page 3 [PC860 (Portuguese)]
4	Page 4 [PC863 (Canadian-French)]
5	Page 5 [PC865 (Nordic)]
255	Page 255 [Space page]

Table 47 Character Code Table

Function	**Select print mode(s)**
ASCII	[ESC] ! <n>
Hexadecimal	1BH 21H <n>
Decimal	<27> <33> <n>
Range	0 ≤ n ≤ 255
Description	The [ESC] ! <n> command selects print modes using <n> as follows. The default character font is 7 x 9. The defaults for the other print modes are set to <n> = 1.

Bit	Off/On	Hexadecimal	Decimal	Function
0	Off	00H	<0>	Select 9 x 9 character font.
	On	01H	<1>	Select 7 x 9 character font.
1,2	-	-	-	Undefined
3	Off	00H	<0>	Emphasized mode is not selected.
	On	08H	<8>	Emphasized mode is selected.
4	Off	00H	<0>	Double-height mode is not selected.
	On	10H	<16>	Double-height mode is selected.
5	Off	00H	<0>	Double-wide mode is not selected.
	On	20H	<32>	Double-wide mode is selected.
6	-	-	-	Undefined
7	Off	00H	<0>	Underline mode is not selected.
	On	80H	<128>	Underline mode is selected.

Table 48 Print Modes

Function	**Turn on/off underline mode**
ASCII	[ESC] - <n>
Hexadecimal	1BH 2DH <n>
Decimal	<27> <45> <n>
Range	<n> = 0, 1, 48, 49
Description	The [ESC] - <n> command turns on or off underline mode. When <n> = 1 or 49, underline mode is turned on, and when <n> = 0 or 48, underline mode is turned off. The default setting is <n> = 0.

Function	**Turn on/off emphasized mode**
ASCII	[ESC] E <n>
Hexadecimal	1BH 45H <n>
Decimal	<27> <69> <n>
Range	0 ≤ n ≤ 255
Description	The [ESC] E <n> command turns on or off emphasized mode. When the least significant bit (LSB) of <n> = 1, emphasized mode is turned on; when it is 0, emphasized mode is turned off. The default setting is <n> = 0. Emphasized and double-strike printing appear the same.

Function	**Turn on/off double-strike mode**
ASCII	[ESC] G <n>
Hexadecimal	1BH 47H <n>
Decimal	<27> <71> <n>
Range	0 ≤ n ≤ 255
Description	The [ESC] G <n> command turns on or off double-strike mode. When the least significant bit (LSB) of <n> = 1, double-strike mode is turned on; when it is 0, double-strike mode is turned off. The default setting is <n> = 0. Double-strike and emphasized printing appear the same.

Function	**Turn on/off upside-down print mode**
ASCII	[ESC] { <n>
Hexadecimal	1BH 7BH <n>
Decimal	<27> <123> <n>
Range	0 ≤ n ≤ 255
Description	The [ESC] { <n> turns on or off upside-down printing mode. When the least significant bit of <n> = 1, upside-down printing mode is turned on; when it is 0, upside-down printing mode is turned off. The default setting is <n> = 0. When upside-down mode is turned on, the printer prints 180° rotated characters from right to left. The line printing order is not reversed, so the order of the data transmitted is important. The command is enabled only when input at the beginning of a line.

Function	**Turn on/off 90° rotation mode**	**EPOS ONLY**
ASCII	ESC V <n>	
Hexadecimal	1BH 56H <n>	
Decimal	<27> <86> <n>	
Range	<n> = 0, 1, 2, 48, 49, 50	
Description	The ESC V <n> command turns on/off 90° clockwise rotation mode. The command is only enabled in standard mode. In page mode, an internal flag is activated, and the command is enabled when the printer returns to standard mode.	

<n>	Function
0, 48	Turns off all rotation modes
1, 49	Turns on 90° clockwise rotation mode
2, 50	Turns on 90° counterclockwise rotation mode

Table 49 Rotation Modes

Function	**Set character size**	**EPOS ONLY**
ASCII	GS ! <n>	
Hexadecimal	1DH 21H <n>	
Decimal	<29> <33> <n>	
Description	The GS ! <n> command sets the horizontal and vertical scaling. The upper nibble is the horizontal scale, and the lower nibble is the vertical scale. The minimum size is x1, and the maximum size is x8.	
Where <n> =	`xxxx0000` Vertical scale 1 `xxxx0001` Vertical scale 2 `xxxx0111` Vertical scale 8 `0000xxxx` Horizontal scale 1 `0001xxxx` Horizontal scale 2 `0111xxxx` Horizontal scale 8	

Function	**Begin italics**	**EPOS ONLY**
ASCII	[ESC] 4	
Hexadecimal	1BH 34H	
Decimal	<27> <52>	
Description	The [ESC] 4 command begins italics print mode.	
Note 1	Italics are not available in all print modes.	

Function	**End italics**	**EPOS ONLY**
ASCII	[ESC] 5	
Hexadecimal	1BH 35H	
Decimal	<27> <53>	
Description	The [ESC] 5 command ends italics print mode.	

Panel Button Commands

Function	**Enable/disable paper feed**
ASCII	[ESC] c 5 <n>
Hexadecimal	1BH 63H 35H <n>
Decimal	<27> <99> <53> <n>
Range	$0 \le n \le 255$
Description	The [ESC] c 5 <n> command enables or disables the FEED Button. When the least significant bit (LSB) of <n> = one, the FEED Button is disabled; when it is zero, the button is enabled. To prevent problems caused by accidentally pressing the FEED Button, use the command to disable it. The FEED Button is temporarily enabled, regardless of how the command is set during the wait time set by the [GS] z 0 command for paper insertion and during the recovery confirmation time.
Where <n>	Bit 0 = 1 the FEED Button is disabled Bit 0 = 0 the button is enabled.

Paper Sensor Commands

Function **Select paper sensor(s) to stop printing**

ASCII [ESC] c 4 <n>
Hexadecimal 1BH 63H 34H <n>
Decimal <27> <99> <52> <n>
Range 0 ≤ n ≤ 255

Description **ESC c 4 *n*** selects whether to stop printing or not when the paper near end is detected. There are three sensors in the TM U325D that are simulated in the POSjet® 1500: the paper roll near-end, paper roll end sensor, and validation sensor. The paper roll near-end sensor is enabled when either bit 0 or bit 1 is on. The paper roll end sensor is enabled when either bit 2 or bit 3 is on. The validation sensor is enabled when either bit 6 or bit 7 is on. When a paper near-end or a paper end is detected, printing stops after printing the current line. The printer goes off-line after printing stops. Installing a new roll starts printing again. The default setting is n=12. If the paper roll near-end sensor or paper roll end sensor is disabled and a paper end is detected, printing does not stop. The printer does not go off-line, and the Paper Out LED comes on. When the validation sensor is enabled and a paper-end is detected, the printer ejects the paper after printing as much as possible and enters the paper waiting state. When the validation sensor is disabled and a paper-end is detected, the printer does not stop printing and eject the paper. It is possible to select multiple sensors to stop printing. Then when any sensor detects a paper-end, printing stops. When a paper sensor is enabled with this command, printing stops only when the corresponding paper is selected for printing. Print sheet can be selected by using **ESC c** 0.

NOTE: The POSjet® does not allow the paper out sensor to be disabled.

The paper sensor(s) used to stop printing are selected by using ***n*** as follows:

Bit	Off/On	Hex	Decimal	Function
0	Off	00	0	Paper roll near-end sensor disabled.
	On	01	1	Paper roll near-end sensor enabled.
1	Off	00	0	Paper roll near-end sensor disabled.
	On	02	2	Paper roll near-end sensor enabled.
2- 3	—	—	—	Paper roll end sensor enabled (always on)
4-5	—	—	—	Undefined.
6	Off	00	0	Validation sensor disabled.
	On	40	64	Validation sensor enabled.
7	Off	00	0	Validation sensor disabled.
	On	80	128	Validation sensor enabled.

Table 50 Paper Sensor Commands

Function	**Select paper sensor(s) to output paper-end signals**
ASCII	[ESC] c 3 <n>
Hexadecimal	1BH 63H 33H <n>
Decimal	<27> <99> <51> <n>
Range	0 ≤ n ≤ 255
Description	**ESC c 3 *n*** selects whether to output paper-end signals or not to a parallel interface. The default setting is n=15. The paper roll near-end, paper roll end, and validation sensors can be selected. When the sensors are selected to output signals and any sensor detects a paper-end, the paper-end signal is output. When all sensors are disabled, and a paper end is detected, status is always a paper present. The paper roll near-end sensor is enabled when either bit 0 or bit 1 or both is on. The paper roll end sensor is enabled when either 2 or 3 or both bits is on. The validation sensor is enabled when either 6 or 7 or both bits are on. This command is enabled only with a parallel interface and is ignored with a serial interface. The paper sensor(s) used to output paper-end signals are selected by using ***n*** as follows:

Bit	Off/On	Hex	Decimal	Function
0	Off	00	0	Paper roll near-end sensor disabled.
	On	01	1	Paper roll near-end sensor enabled.
1	Off	00	0	Paper roll near-end sensor disabled
	On	04	2	Paper roll near-end sensor enabled.
2	Off	00	0	Paper roll end sensor disabled.
	On	04	4	Paper roll end sensor enabled.
3	Off	00	0	Paper roll end sensor disabled.
	On	08	8	Paper roll end sensor enabled.
4-5	—	—	—	Undefined.
6	Off	00	0	Validation sensor disabled.
	On	40	64	Validation sensor enabled.
7	Off	00	0	Validation sensor disabled.
	On	80	128	Validation sensor enabled.

Table 51 Paper Sensor Commands

Print Position Commands

Function	**Set absolute print position**	**EPOS ONLY**
ASCII	[ESC] $ <n_l> <n_h>	
Hexadecimal	1BH 24H <n_l> <n_h>	
Decimal	<27> <36> <n_l> <n_h>	
Range	$0 \le n_l \le 255$ $0 \le n_h \le 255$	
Description	The ESC $ <n_l> <n_h> command sets the print starting position from the beginning of the line.	

Function	**Set relative print position**	**EPOS ONLY**
ASCII	[ESC] \ <n_l> <n_h>	
Hexadecimal	1BH 5CH <n_l> <n_h>	
Decimal	<27> <92> <n_l> <n_h>	
Range	$0 \le n_l \le 255$ $0 \le n_h \le 255$	
Description	The [ESC] \ <n_l> <n_h> command sets the print starting position based on the current position and the distance from the current position to $[(n_l + n_h \times 256) \times$ horizontal unit$]$. When standard mode is selected, the horizontal motion unit set by GS P is used. When page mode is selected, the horizontal or vertical motion unit set by GS P is used for the print direction set by ESC T.	

Function	**Select justification**
ASCII	[ESC] a <n>
Hexadecimal	1BH 61H <n>
Decimal	<27> <97> <n>
Range	$0 \le n \le 2$ $48 \le n \le 50$
Description	The [ESC] a <n> command aligns all the data in one line to a specified position. Left justification is selected when <n> = 0 or 48, centering is selected when <n> = 2 or 50. The default setting is left justification. (<n> = 0). The command is enabled only when input at the beginning of a line.

Function	**Set back space**	**EPOS ONLY**
ASCII	[BS]	
Hexadecimal	08H	
Decimal	<8>	
Description	The [BS] command moves the print buffer one character width to the left. The pointer position cannot be moved to the left of the left margin. [BS] does not cause the buffer to be printed; the following data is OR'ed with the previous data.	

Function	**Set horizontal tab**
ASCII	[HT]
Hexadecimal	9H
Decimal	<10>
Description	The [HT] command moves the print position to the next horizontal tab position. The command is used to align character columns. The command is ignored unless another horizontal tab position has been set.
Note 1	In TM-U325D mode, the buffer must be set to 40 characters.

Function	**Set horizontal tab positions**
ASCII	[ESC] D <n_1> … <n_k> NUL
Hexadecimal	1BH 44H <n_1> … <n_k> 00
Decimal	<27> <68> <n_1> … <n_k> <0>
Range	$1 \le n \le 255$ $0 \le k \le 32$
Description	The [ESC] D <n_1> … <n_k> NUL command sets the horizontal tab positions. <n> specifies the column number for setting a horizontal tab position. The command deletes any previously set, horizontal tab positions. Up to 32 tab positions can be set. The default tab positions are at intervals of eight characters for 7 x 9 font.
Note 1	In TM-U325D mode, the buffer must be set to 40 characters.

Function	**Set left margin**	**EPOS ONLY**
ASCII	GS L <n_l> <n_h>	
Hexadecimal	1DH 4CH <n_l> <n_h>	
Decimal	<29> <76> <n_l> <n_h>	
Range	$0 \le n_l \le 255$ $0 \le n_h \le 255$	
Description	The GS L <n_l> <n_h> command sets the left margin using n_l and n_h. The left margin is set to $[(n_l + n_h \times 256) \times$ horizontal motion unit$)]$ from the beginning of the line. In standard mode, the command is enabled only when input at the beginning of a line. In page mode, an internal flag is activated, and the command is enabled when the printer returns to standard mode.	

Function	**Set printing area width**	**EPOS ONLY**
ASCII	GS W <n_l> <n_h>	
Hexadecimal	1DH 57H <n_l> <n_h>	
Decimal	<29> <87> <n_l> <n_h>	
Range	$0 \le n_l \le 255$ $0 \le n_h \le 255$	
Description	The printing area width is set to $[(n_l + n_h \times 256) \times$ horizontal motion unit$)]$ from the left margin. In standard mode, the command is enabled only when input at the beginning of a line. In page mode, an internal flag is activated, and the command is enabled when the printer returns to standard mode.	

Function	**Turn on/off unidirectional printing mode**
ASCII	[ESC] U <n>
Hexadecimal	1BH 55H <n>
Decimal	<27> <85> <n>
Range	$0 \le n \le 255$
Description	The [ESC] U <n> command turns on/off unidirectional printing mode. When the least significant bit (LSB) of <n> = 1, unidirectional printing is turned on. When LSB = 0, unidirectional printing is turned off, and bidirectional printing is turned on. Unidirectional printing can be turned on when printing double-high characters to ensure that the top and bottom of the characters are aligned. <n> = 0 is the default setting.

Function	**Set left margin**	**EPOS ONLY**
ASCII	[ESC] l <n>	
Hexadecimal	1DH 6CH <n>	
Decimal	<29> <108> <n>	
Range	$0 \le n \le 255$	

Description The [ESC] 1 <n> command sets the left margin using <n>. The left margin is set to <n> characters from the beginning of the line.

Function	**Set right margin**	**EPOS ONLY**
ASCII	[ESC] Q <n>	
Hexadecimal	1BH 51H <n>	
Decimal	<29> <81> <n>	
Range	0 ≤ n ≤ 255	
Description	The [ESC] Q <n> command sets the right margin using <n>. The right margin is set to <n> characters from the beginning of the line.	

Function	**Return home**
ASCII	[ESC] <
Hexadecimal	1BH 3CH
Decimal	<27> <60>
Description	The [ESC] < command moves the print head to the home position.

Bit-Image Commands

Function	**Select bit-image mode**
ASCII	[ESC] * <m> <nl> <nh> <dl> … <dk>
Hexadecimal	1BH 2AH <m> <nl> <nh> <dl> … <dk>
Decimal	<27> <42> <m> <nl> <nh> <dl> … <dk>
Range	<m> = 0, 1 in TM U325D 0, 1, 32, 33 in EPOS mode 0 ≤ nl ≤ 255 0 ≤ nh ≤ 3 0 ≤ d ≤ 255 k = nl + nh x 256 for <m> = 0 or 1 k = (nl + nh x 256) * 3 for <m> = 32 or 33

Description [ESC] * <m> <n_l> <n_h> <d_l> … <d_k> command selects a bit-image mode using <m> for the number of dots specified by (n_l + n_h x 256) in mode 0 or 1 and (n_l + n_h x 256)*3 in mode 32 or 33 and <d> indicates the bit image data. Set a bit to one to print a dot, or set a bit to zero to not print a dot. Use the command to print a predefined picture or logo. The modes selectable by <m> are listed below.

<m>	Mode	Vertical Direction		Horizontal Direction	
		Dot Density	**Number of Dots**	**Dot Density**	**Number of Dots**
0	8-dot single density	96 dpi	8	80 dpi	200
1	8-dot double density	96 dpi	8	160 dpi	400
32	24 dot single density	96 dpi	24	120 dpi	300
33	24 dot double density	192 dpi	24	240 dpi	600

Table 52 Print Density Selection

Status Commands

Function **Enable/disable Automatic Status Back (ASB)**

ASCII [GS] a <n>
Hexadecimal 1DH 61H <n>
Decimal <29> <97> <n>
Range 0 ≤ n ≤ 255

Description The [GS] a <n> command selects a status for ASB transmission. ASB is enabled if any status item is selected. The printer automatically transmits a 4-byte status message whenever the status changes. Multiple status items can be enabled or disabled. When <n> = 0, ASB is disabled.

The default depends on the offline mode configuration. If offline buffer full only is set the ASB is defaulted on. When the printer is disabled by the [ESC] = command and ASB is enabled, the printer transmits a 4-byte status message every time the status changes. The paper roll near-end sensor is an option. If the printer is not equipped with the paper near-end sensor, bits 0 and 1 of the third byte are always on, with paper adequate status. Bit 3 of the second byte is always, "No error." The status items are selected using <n> as follows:

Bit	Off/On	Hex	Decimal	Status for Automatic Status Back (ASB)
0	Off	00H	<0>	Drawer kick-out connector pin 3 status disabled
	On	01H	<1>	Drawer kick-out connector pin 3 status enabled
1	Off	00H	<0>	On-line/off-line disabled
	On	02H	<2>	On-line/off-line enabled
2	Off	00H	<0>	Error status disabled
	On	04H	<4>	Error status enabled
3	Off	00H	<0>	Paper roll sensor status disabled
	On	08H	<8>	Paper roll sensor status enabled
-	-	-	-	Undefined

Table 53 Automatic Status Back (ASB) Values for <n>

Bit	Off/On	Hex	Decimal	Status for Automatic Status Back (ASB)
0	Off	00H	<0>	Not used; fixed to Off
1	Off	00H	<0>	Not used; fixed to Off
2	Off	00H	<0>	Drawer kick-out connector pin 3 low
	On	04H	<4>	Drawer kick-out connector pin 3 high
3	Off	00H	<0>	On-line
	On	08H	<8>	Off-line
4	On	10H	<16>	Not used; fixed to On
5	-	-	-	Undefined
6	Off	00H	<0>	Paper is not being fed by the FEED button.
	On	40H	<64>	Paper is being fed by the FEED button.
	Off	00H	<0>	Not used; fixed to Off

Table 54 Automatic Status Back (ASB) First Byte (Printer Information)

Bit	Off/On	Hex	Decimal	Status for Automatic Status Back (ASB)
0[25]	Off	00H	<0>	Not waiting for on-line recovery
	On	01H	<1>	Waiting for on-line recovery
1	-	-	-	Undefined
2	Off	00H	<0>	No mechanical error
	On	04H	<4>	Mechanical error occurred
3	Off	00H	<0>	No Auto-cutter error
	On	08H	<8>	Auto-cutter error occurred
4	Off	00H	<0>	Not used; fixed to off
5	Off	00H	<0>	No unrecoverable error[26]
	On	20H	<32>	Unrecoverable error occurred
6	Off	00H	<0>	No temporary abnormality of the print head temperature (high temperature)
	On	40H	<64>	Temporary abnormality of the print head temperature (high temperature) occurred
	Off	00H	<0>	Not used; fixed to Off

Table 55 Automatic Status Back (ASB) Second Byte (Error Information)

[25] The POSjet® 1500 does not require any operator intervention to recover from on-line recovery. The Insta-Load™ feature will automatically restore the printer to the on line state. This bit is fixed to 0 in the TM U325D mode. It is only active in the ESC/POS emulation.

[26] The POSjet® can not recover from mechanical errors without flushing the input buffer. All print data will be lost if a mechanical error occurs.

Bit	Off/On	Hex	Decimal	Status for Automatic Status Back (ASB)
0,1	Off	00H	<0>	Paper near-end sensor: paper adequate
	On	(03H)	(3)	Paper near-end sensor: paper near end
2,3	Off	00H	<0>	Paper end sensor: paper present
	On	0CH	<12>	Paper end sensor: paper not present
4	Off	00H	<0>	Not used; fixed to Off
5,6	-	-	-	Undefined
7	Off	00H	<0>	Not used; fixed to Off

Table 56 Automatic Status Back (ASB) Third Byte (Paper Sensor Information)

Bit	Off/On	Hex	Decimal	Status for Automatic Status Back (ASB)
0-3	-	-	-	Undefined
4	Off	00H	<0>	Not used; fixed to Off
5,6	-	-	-	Undefined
7	Off	00H	<0>	Not used; fixed to Off

Table 57 Automatic Status Back (ASB) Fourth Byte (Paper Sensor Information)

Function **Transmit status**

ASCII [GS] r <n>
Hexadecimal 1DH 72H <n>
Decimal <29> <114> <n>
Range $1 \le n \le 2$
$49 \le n \le 50$

Description The [GS] r <n> command transmits the status specified by <n> as follows: paper sensor status as one byte of data when <n> = 1 or 49, and drawer kick-out connector status when <n> = 2 or 50. The paper present status of bits 2 and 3 for the paper sensor status is not transmitted because the printer goes off-line when a paper-end is detected by the paper-end sensor. The paper roll near-end sensor is an option. If the sensor is not installed, bits 0 and 1 for the paper sensor status are always in the "Paper adequate" status.

Bit	Off/On	Hex	Decimal	Status
0,1	Off	00H	<0>	Paper near-end sensor: paper adequate
	On	(03H)	(3)	Paper near-end sensor: paper near end
2,3	Off	00H	<0>	Paper end sensor: paper present
	On	0CH	<12>	Paper end sensor: paper not present
4	Off	00H	<0>	Not used; fixed to Off
5,6	-	-	-	Undefined
7	Off	00H	<0>	Not used; fixed to Off

Table 58 Paper Sensor Status (<n> = 1, 49)

Bit	Off/On	Hex	Decimal	Status
0	Off	00H	<0>	Drawer kick-out connector pin 3 low
	On	01H	<1>	Drawer kick-out connector pin 3 high
1-3	-	-	-	Undefined
4	Off	00H	<0>	Not used; fixed to Off
5,6	-	-	-	Undefined
7	Off	00H	<0>	Not used; fixed to Off

Table 59 Drawer Kick-out Connector Status (<n> = 2, 50)

Function	**Transmit real-time status**
ASCII	[DLE] [EOT] <n>
Hexadecimal	10H 04H <n>
Decimal	<16> <4> <n>
Range	$1 \le n \le 4$
Description	The [DLE] EOT <n> command transmits the specified status in real time. The command is executed if the printer is off-line, the print buffer is full, or an error occurs. If the printer goes off-line due to a paper-end condition, bit 5 of the printer status (waiting for on-line recovery) is on from the time the paper roll is inserted to the time the printer goes on-line. See the [GS] z 0 command for details of the on-line recovery wait time. The paper roll near-end sensor is an option. If the printer does not have a paper near-end sensor, bits 2 and 3 of the paper roll sensor status will always be "Paper adequate." Bit 3 of the second byte is always "No error occurred."

<n>	Function
1	Transmit printer status
2	Transmit off-line status
3	Transmit error status
4	Transmit paper roll sensor status

Table 60 Values for the Status Function, <n>

Bit	Off/On	Hexl	Decimal	Status
0	Off	00H	<0>	Not used; fixed to off
1	On	02H	<2>	Not used; fixed to on
2	Off	00H	<0>	Drawer kick-out connector pin 3 low
	On	04H	<4>	Drawer kick out connector pin 3 high
3	Off	00H	<0>	On-line
	On	08H	<8>	Off-line
4	On	10H	<16>	Not used; fixed to on
5	Off	00H	<0>	Not waiting for on-line recovery
	On	20H	<32>	Waiting for on-line recovery[27]
6	-	-	-	Undefined
7	Off	00H	<0>	Not used; fixed to off

Table 61 Printer Status (<n> = 1)

[27] The POSjet® 1500 does not require any operator intervention to recover from on-line recovery. The Insta-Load™ feature will automatically restore the printer to the on line state. This bit is fixed to 0 in the TM U325D mode. It is only active in the ESC/POS emulation.

Bit	Off/On	Hexl	Decimal	Status
0	Off	00H	<0>	Not used; fixed to off
1	On	02H	<2>	Not used; fixed to on
2	-	-	-	Undefined
3	Off	00H	<0>	Paper is not being fed by the FEED button.
	On	08H	<8>	Paper is being fed by the FEED button.
4	On	10H	<16>	Not used; fixed to on
5	Off	00H	<0>	No paper-end stop
	On	20H	<32>	Printing stops due to paper-end
6	Off	00H	<0>	No error
	On	40H	<64>	Error occurs
7	Off	00H	<0>	Not used; fixed to off

Table 62 Off-line Status (<n> = 2)

Bit	Off/On	Hex	Decimal	Status
0	Off	00H	<0>	Not used; fixed to off
1	On	02H	<2>	Not used; fixed to on
2	Off	00H	<0>	No mechanical error
	On	04H	<4>	Mechanical error occurred
3	Off	00H	<0>	No Auto-cutter error
	On	08H	<8>	Auto-cutter error occurred
4	On	10H	<16>	Not used; fixed to on
5	Off	00H	<0>	Unrecoverable error occurred[28]
	On	20H	<32>	Recoverable error occurred
6	Off	00H	<0>	Not used; fixed to off
7	Off	00H	<0>	Not used; fixed to off

Table 63 Error Status (<n> = 3)

Bit	Off/On	Hex	Decimal	Status
0	Off	00H	<0>	Not used; fixed to off
1	On	02H	<2>	Not used; fixed to on
2,3	Off	00H	<0>	Paper near-end sensor: paper adequate
	On	(0CH)	(<12>)	Paper near-end sensor: paper near end
4	On	10H	<16>	Not used; fixed to on
5,6	Off	00H	<0>	Paper end sensor: paper adequate
	On	60H	<96>	Paper end sensor: paper not present
7	Off	00H	<0>	Not used; fixed to off

Table 64 Paper Roll Sensor Status (<n> = 4)

[28] The POSjet® 1500 does not define any errors as recoverable. Following the recovery process will not restore the data buffers.

Function	**Transmit Peripheral status**
ASCII	[ESC] u <n>
Hexadecimal	1BH 75H <n>
Decimal	<27> <117> <n>
Range	n = 0
Description	The [ESC] r <n> command transmits peripheral status has been replaced by the [GS] r command. The POSjet® 1500 return cash drawer status as specified below.

Bit	Off/On	Hex	Decimal	Status
0	Off	00H	<0>	Pin 3 is Low
	On	(03H)	(3)	Pin 3 is High
1 - 7	Off	00H	<0>	Not used; fixed to Off

Table 65 Peripheral Status (<n> = 0, 48)

Function **Transmit Paper Sensor status**

ASCII [ESC] v
Hexadecimal 1BH 76H
Decimal <27> <118>

Description The [ESC] v command has been replaced by the [GS] r command. The [ESC] v command transmits paper status has been replaced by the [GS] r command. The POSjet® 1500 return paper status as specified below.

Bit	Off/On	Hex	Decimal	Status
0,1	Off	00H	<0>	Paper adequate
	On	(03H)	(3)	Paper Near End
2,3	Off	00	<0>	Paper Present
	On	(0CH)	<12>	Paper Not Present
5-7	Off	00	<0>	Not used, Fixed Off

Table 66 Paper Status

Printing Paper Command

The TM-U325D supports the following commands for controlling printing paper:

Function **Select paper type for printing**

ASCII [ESC] c 0 <n>
Hexadecimal 1BH 63H 30H <n>
Decimal <27> <99> <48> <n>
Range ***n*** = 1, 1 ≤ *n* ≤ 3, 8 ≤ *n* ≤ 11

Description **ESC c 0 *n*** selects paper type(s) for printing. Paper roll and validation paper are available. Both bits 0 and 1 indicate paper roll and if either of them is available, the paper roll is selected as the print sheet. Validation and paper roll can be selected simultaneously, but in this case, be sure to use a pressure sensitive paper so that the printing result is on the paper roll. At this time, the setting values for validation are available for **ESC** 2, **ESC** 3, **GS**L, and **GS** W. This command is enabled only when processed at the beginning of a line. When previously disabled validation paper is enabled, the printer waits for the validation to be inserted. When previously enabled validation paper is disabled, the printer ejects the paper. The default setting is ***n*** = 1. The paper type(s) are selected for printing by using ***n*** as follows:

Bit	Off/On	Hex	Decimal	Function
0	Off	00	0	Paper roll disabled.
	On	01	1	Paper roll enabled
1	Off	00	0	Paper roll disabled.
	On	02	2	Paper roll enabled.
2	—	—	—	Undefined.
3	Off	00	0	Validation paper disabled.
	On	08	8	Validation paper enabled.
4–7	—	—	—	Undefined.

Function **Select paper type for command settings**

ASCII [ESC] c 1 <n>
Hexadecimal 1BH 63H 31H <n>
Decimal <27> <99> <49> <n>
Range ***n*** = 1, 1 ≤ *n* ≤ 3, 8 ≤ *n* ≤ 11

Description **ESC c 1 *n*** selects paper type(s) for setting. Paper roll and validation paper are available. Both bits 0 and 1 indicate paper roll and if either of them is available, the paper roll is

selected as the print sheet. The commands that need to select paper types for setting are **ESC** 2, **ESC** 3, **GS** L, and **GS** W. The value of ***n*** is used as follows:

Bit	Off/On	Hex	Decimal	Function
0	Off	00	0	Paper roll disabled.
	On	01	1	Paper roll enabled.
1	Off	00	0	Paper roll disabled.
	On	02	2	Paper roll enabled.
2	—	—	—	Undefined.
3	Off	00	0	Validation paper disabled.
	On	08	8	Validation paper enabled.
4–7	—	—	—	Undefined.

Function **Select paper type for command settings**

ASCII [ESC] f <t_1><t_2>

Hexadecimal 1BH 66H <t_1><t_2>

Decimal <27> <116> <t_1><t_2>

Range $0 \le t_1 \le 15$

$0 \le t_2 \le 64$

Description **ESC f** ***t1 t2*** sets the time that the printer waits for validation paper to be inserted to $t_1 \times 1$ minutes, and the time from detection of the validation to the start of printing to $t_2 \times 0.1$ seconds. When ***t***1=0, the validation waiting time is not set and the printer continues waiting for a validation to be inserted. The default validation waiting time is not set, and the start operation time is set to 10 seconds **(**t_1=0, t_2=10). This setting alone, however, does not cause the printer to immediately start waiting for a validation to be inserted. The setting becomes effective when validation paper is used. **DLE ENQ** is used to cancel the validation waiting state.

Bar Code Commands

Function	**Set bar code height**	**EPOS ONLY**
ASCII	GS h <n>	
Hexadecimal	1DH 68H <n>	
Decimal	<29> <104> <n>	
Range	$1 \le n \le 255$	
Default	0.90 inch high	
Description	The GS h <n> command sets the height of the bar code. The bar code height is set to n/180 inch.	

Function	**Print bar code**	**EPOS ONLY**
[1]ASCII	GS k <m> <d_l> … <d_k> NUL	
Hexadecimal	1DH 6BH <m> <d_l> … <d_k> 00	
Decimal	<29> <107> <m> <d_l> … <d_k> 0	
[2]ASCII	GS k <m> <n> <d_l> … <d_n>	
Hexadecimal	1DH 6BH <m> <n> <d_l> … <d_n>	
Decimal	<29> <107> <m> <n> <d_l> … <d_n>	
Range	[1] $0 \le m \le 6$ (k and d depend on the bar code system used.) [2] $65 \le m \le 73$ (n and d depend on the bar code system used.)	
Description	The GS k <m> <d_l> … <d_k> NUL command selects a bar code system and prints the bar code.	

<m>		Bar Code System	Number of Characters	Remarks
1	0	UPC A	$11 \le k \le 12$	$48 \le d \le 57$
1	1	UPC E	$11 \le k \le 12$	$48 \le d \le 57$
1	2	JAN-13 (EAN-13)	$12 \le k \le 13$	$48 \le d \le 57$
1	3	JAN-8 (EAN-8)	$7 \le k \le 8$	$48 \le d \le 57$
1	4	Code 39	$1 \le k$	$48 \le d \le 57$, $65 \le d \le 90$ d = 32, 36, 37, 43, 45, 46, 47
1	5	ITF	$1 \le k$ (even number)	$48 \le d \le 57$
1	6	Codabar	$1 \le k$	$48 \le d \le 57$, $65 \le d \le 68$ d = 32, 36, 37, 43, 45, 46, 47, 58
2	65	UPC A	$11 \le k \le 12$	$48 \le d \le 57$
2	66	UPC E	$11 \le k \le 12$	$48 \le d \le 57$
2	67	JAN-13 (EAN-13)	$12 \le k \le 13$	$48 \le d \le 57$
2	68	JAN-8 (EAN-8)	$7 \le k \le 8$	$48 \le d \le 57$
2	69	Code 39	$1 \le n \le 255$	$48 \le d \le 57$, $65 \le d \le 90$ d = 32, 36, 37, 43, 45, 46, 47
2	70	ITF	$1 \le n \le 255$ (even number)	$48 \le d \le 57$

Table 67 Bar Code System Based on <m>

<m>		Bar Code System	Number of Characters	Remarks
2	71	Codabar	1 ≤ n ≤ 255	48 ≤ d ≤ 57, 65 ≤ d ≤ 68 d = 32, 36, 37, 43, 45, 46, 47, 58
2	72	Code 93	1 ≤ n ≤ 255	0 ≤ d ≤ 127
2	73	Code 128	2 ≤ n ≤ 255	0 ≤ d ≤ 127

Table 68 Bar Code System Based on <m>

[Description for [1]]

<d> indicates the character code to be printed.

A null (00 Hex) character ends the bar code definition.

[Description for [2]]

<n> indicates the number of bytes of bar code data to be processed immediately following <n>.<d> indicates the character code to be printed.

The following apply to both

GS k <m> <d_l> … <d_k> NUL
GS k <m> <n> <d_l> … <d_n>:

If the horizontal width exceeds the printing area, the printer only feeds the paper.

These commands feed as much paper as necessary to print the bar code according to the GS h command.

These commands are enabled only when no data exists in the print buffer. When data does exist in the print buffer, the printer processes the data following <m> as normal data.

After printing a bar code, the print position is set at the beginning of the line.

These commands are not effected by print modes (emphasized, underline, character size, etc.), except for upside-down mode.

Function **Select printing position of HRI characters** **EPOS ONLY**

ASCII GS H <n>
Hexadecimal 1DH 48H <n>
Decimal <29> <72> <n>
Range 0 ≤ n ≤ 3, 48 ≤ n ≤ 51
Description The GS H <n> command selects the printing position of HRI (Human Readable Interpretation) characters when printing a bar code. <n> selects the printing position as follows.

<n>	Printing position
0, 48	Not printed
1, 49	Above bar code
2, 50	Below bar code
3, 51	Both above and below the bar code

Table 69 Printing Position of HRI Characters

Function	**Select font for HRI characters**	**EPOS ONLY**
ASCII	GS f <n>	
Hexadecimal	1DH 66H <n>	
Decimal	<29> <102> <n>	
Range	<n> = 0, 1, 48, 49	
Description	The GS f <n> command selects a font for the HRI (Human Readable Interpretation) characters used when printing a bar code. <n> selects a font from the following table.	

<n>	Font
0, 48	Font A (14 x 12)
1, 49	Font B (12 x 12)

Table 70 Font for Human Readable Interpretation (HRI) Characters

Mechanism Control Commands

Function	**Select cut mode and cut paper**
ASCII	[GS] V <m> <n>
Hexadecimal	1DH 56H <m> <n>
Decimal	<29> <86> <m> <n>
Description	When <m> = 1 or 49, <n> is not used and a partial cut is performed. When <m> = 66, [GS] V <m> <n> executes a partial cut (one point left uncut) after paper is fed [cutting position (<n> x approximately 1/144 inch)]. When using the command, there is a gap between the auto-cutter position and the print position. The [GS] V <m> <n> command is only effective when input at the beginning of a line. The [GS] V <m> <n> command executes paper feeding to the manual cutting position.

Function	**Partial knife cut**	**EPOS ONLY**
ASCII	[ESC] i	
Hexadecimal	1BH 69H	
Decimal	<27> <105>	
Description	The [ESC] i command performs a partial knife cut.	

Function	**Perform a partial knife cut**	**EPOS ONLY**
ASCII	[ESC] m	
Hexadecimal	1BH 6DH	
Decimal	<27> <109>	
Description	The [ESC] m command performs a partial knife cut.	

Function	**Sound buzzer**	**EPOS ONLY**
ASCII	[BEL]	
Hexadecimal	07H	
Decimal	<07>	
Description	The [BEL] command sounds the internal buzzer, if equipped.	

Function	**Sound buzzer**	**EPOS ONLY**
ASCII	[ESC] BEL	
Hexadecimal	1BH 07H	
Decimal	<27> <07>	
Description	The [ESC] BEL command sounds the internal buzzer, if equipped.	

Function	**Load Check for Processing**	**EPOS ONLY**
ASCII	[FS] a 1	
Hexadecimal	1CH 61H 31H	
Decimal	<28> <97> <49>	
Description	Position a form to the top edge. This command is typically used to print the face of a check in rotated print mode. It will feed the check into the printer so the top of the check is in position to print.	

Miscellaneous Commands

Function	**Set horizontal and vertical motion units**	**EPOS ONLY**
ASCII	[GS] P x y	
Hexadecimal	1DH 50H x y	
Decimal	<29> <80> x y	
Range	0 ≤ x ≤ 255	
Default	x = 180, y = 360	
Description	The GS P x y command sets the horizontal and vertical motion units to 1/x inches and 1/y inches, respectively. When x and y are set to zero, the default setting of each value is used.	

Function	**Initialize the printer**
ASCII	[ESC] @
Hexadecimal	1BH 40H
Decimal	<27> <64>
Description	The [ESC] @ command initializes the printer. All settings, including character font and line spacing, are canceled.

Function	**Transmit printer ID**
ASCII	[GS] I <n>
Hexadecimal	1DH 49H <n>
Decimal	<29> <73> <n>
Range	1 ≤ n ≤ 3 49 ≤ n ≤ 51
Description	The [GS] I <n> command transmits the printer ID specified by <n> below. Each printer ID consists of one byte of data.

<n>	Printer ID	Hex ID
1,49	Printer model ID	0DH
2,50	Type ID	22H or 34D[29]
3,51	ROM version ID	2H or 2D.

Table 71 Printer ID

Bit	Off/On	Hex	Decimal	Function
0	Off	00H	<0>	No two-byte character code
1	Off	00H	<0>	Not Auto-cutter equipped
	On	02H	<2>	Auto-cutter equipped
2,3	-	-	-	Undefined
4	Off	00H	<0>	Not used; fixed to off
5,6	-	-	-	Undefined
7	Off	00H	<0>	Not used; fixed to off

Table 72 Type ID (<n> = 2 or 50)

[29] The Epson Type ID and ROM version are based on the Epson TM325 documentation and a sample printer.

Function	**Generate pulse**
ASCII	[ESC] p <m> <t_1> <t_2>
Hexadecimal	1BH 70H <m> <t_1> <t_2>
Decimal	<27> <112> <m> <t_1> <t_2>
Range	<m> = 0, 1, 48, 49 $0 \le t1 \le 255$ $0 \le t2 \le 255$
Description	The [ESC] p <m> <t_1> <t_2> command sends a pulse (on time = <t_1> x 2 msec) to the specified connector pin. When <m> = 1 or 48, the pulse is sent to drawer-kick-out connector pin 2. When <m> = 0 or 48, the pulse is sent to drawer-kick-out connector pin 2; when <m> = 1 or 49, the pulse is sent to drawer-kick-out connector pin 5.

Function	**Select peripheral device status**
ASCII	[ESC] = <n>
Hexadecimal	1BH 3DH <n>
Decimal	<27> <61> <n>
Range	$1 \le n \le 3$
Description	The [ESC] = <n> command selects the device to which the host computer sends data, based on the value of <n> listed below.

Bit	Off/On	Hex	Decimal	Function
0	Off	00H	<0>	Printer disabled
	On	01H	<1>	Printer enabled
1	Off	00H	<0>	Customer display disabled
	On	02H	<2>	Customer display enabled
2-7	-	-	-	Undefined

Table 73 Peripheral Device Bit Definitions

Note 1 In TM-U325D mode, the value of <n> must be <2> to enable the display, and <1> to enable the printer. This does not match the Epson documentation, but is how the TM-U325D works. The POSjet®1500 Printer matches the TM-U325D in TM-U325D mode. In EPOS mode, you may do both.

Function	**Real-time request to printer**
ASCII	[DLE] [ENQ] <n>
Hexadecimal	10H 05H <n>
Decimal	<16> <5> <n>
Range	<n> = 0, 2
Description	The [DLE] ENQ <n> command responds to a request from the host computer specified by <n> as shown below. The command is also executed when the printer is disabled. When the printer stops printing due to a paper-end condition, <n> = 0 is only effective when the printer is waiting for on-line recovery from the time the paper roll is inserted to the time the printer goes on-line. The on-line recovery wait time is confirmed by the printer status of ASB or the [DLE] EOT command. <n> = 2 is only effective when a recoverable error occurs. The printer can recover from an error without turning off the power. Whether an error occurs or not can be confirmed by the ASB status or the error status of the [DLE] EOT command.

Where <n>

0	Recovers to on-line
2	Recovers from an error after clearing the receive and print buffers

Function	**Enter Test Mode**
ASCII	[GS] (A <2> <0> <n> <m>
Hexadecimal	1DH 28H 41H <2> <0> <n> <m>
Decimal	<29> <40> <65> <2> <0> <n> <m>
Description	This command places the printer into test mode based on the parameters <n> and <m>.
Where <n>	may be 0, 1, 2, 48, 49, or 50. It is intended to select the print station. The POSjet® will accept any of these values
Where <m>	1 or 49 Selects Hex Dump mode. You must press the * Button to exit this mode 2 or 50 Selects Printer configuration print out. 3 or 51 Selects Rolling ASCII test pattern. You must press * Button to exit this mode.

Macro Function Commands

Function	**Start/end macro definition**	**EPOS ONLY**
ASCII	[GS] :	
Hexadecimal	1DH 3AH	
Decimal	<29> <58>	
Description	The [GS] : command starts or ends macro definition. Macro definition starts when the command is received during normal operation and ends when it is received during the macro definition. The macro definition can contain up to 2048 bytes. If the definition exceeds 2048 bytes, the excess data will not be stored.	

Function	**Execute macro**	**EPOS ONLY**
ASCII	GS ^ r t m	
Hexadecimal	1DH 5EH r t m	
Decimal	<29> <94> r t m	
Range	$0 \le r \le 255$ $0 \le t \le 255$ m = See below	
Description	The GS ^ r t m command executes a macro definition. The r specifies the number of times to execute the macro. When Bit 1 of m is set, r is ignored, and the macro is executed infinitely. t specifies the waiting time for executing the macro; it is $t \times 100$ msec for every macro execution. m specifies macro executing mode. When the LSB of m = 0, the macro executes r times continuously with the interval specified by t. When the LSB of m = 1, the printer remains idle and waits for the FEED Button to be pressed (after waiting for the period specified by t). After the button is pressed, the printer executes the macro once. The printer repeats the operation r times. When Bit 5 of m is set, the current macro definition is saved into the printer's nonvolatile flash memory as a start-up macro without executing it. The macro definition is executed upon power-up using the parameters specified by the GS ^ r t m command. If the printer is powered-up into self-test mode, the macro definition will not be executed. A saved macro definition can be deleted with the GS _ command.	

Bit	Off/On	Hexl	Decimal	Function
0	Off	00	0	Macro executes r times continuously with the interval specified by t.
	On	01	1	FEED button controlled operation with time interval t
1-4	-	-	-	Undefined
5	On	20	32	Value given by r is ignored and macro is run infinitely.
6	On	40	64	Save start-up macro definition to flash memory without executing
7	-	-	-	Undefined

Table 74 Macro Control Bit Definitions

Function **Delete start-up macro definition** **EPOS ONLY**

ASCII GS _
Hexadecimal 1DH 5FH
Decimal <29> <95>

Description The GS _ command deletes a start-up macro definition previously created by the GS ^ command. If a start-up macro was not previously defined, the command will be ignored.

User-defined Memory Commands

Function	**Define user-defined bit image**	**EPOS ONLY**
ASCII	GS - <Name..> <0> x y d_1 … d(x *x* y *x* 8)	
Hexadecimal	1DH 2DH <Name..> <0> x y d_1 … d(x *x* y *x* 8)	
Decimal	<29> <45> <Name..> <0> x y d_1 … d(x *x* y *x* 8)	
Range	$1 \le x \le 255$ $1 \le y \le 255$ $0 \le d \le 255$ <Name> = a 15-byte maximum length name to identify the image	

Description

GS - defines a bit-image for storage in the nonvolatile memory pool. The printer maintains an area of flash memory specifically designated for multiple bit-image storage. The area can contain as many bit-images as its size permits. (A printout of the amount of nonvolatile memory remaining can be obtained by performing a printer self test.) Each image is uniquely identified by the name given to it by the <Name> parameter. The name of the bit-image can be from one to 15 bytes long and contain any alphanumeric characters as well as spaces. The format of the bit-image is identical to that defined by the GS * command. The GS-command must be entered in standard mode only at the beginning of a print line. Any image may be up to 2048 bytes long. If the size of the image is larger than the space remaining in the nonvolatile buffer, the image will not be saved. When the last byte of bit-image data is received and there is ample space in the nonvolatile buffer for the bit-image, the bit image will be saved.

The following basic example demonstrates how to define an 8-bit x 8-bit block with the name “MY IMAGE”: A representation of the format of a downloaded bit-image is depicted below.

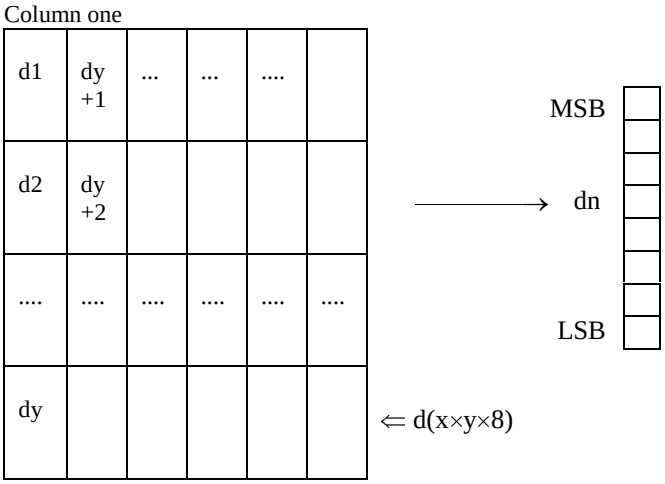


```
PRINT #1, CHR$(29),CHR$(45),                                  REM Enter the GS command
PRINT #1, ”MY IMAGE”,CHR$(0);                                 REM Define the image name
PRINT #1, CHR$(1),CHR$(1);                                    REM Image size (8 x 8 bits)
PRINT #1, CHR$(255),CHR$(255),CHR$(255),CHR$(255);            REM Send 8 bytes of image
PRINT #1, CHR$(255),CHR$(255),CHR$(255),CHR$(255)             REM data
```

Function	**Print user-defined bit image**	**EPOS ONLY**
ASCII	GS 0 <Name..> <0>	
Hexadecimal	1DH 30H <Name..> 0H	
Decimal	<29> <48> <Name..> <0>	
Range	<Name..> = a 15-byte maximum length name to identify the image.	
Description	GS 0 prints a bit-image from storage in the nonvolatile memory pool. The name of the bit-image can be from one to 15 bytes long and contain any alphanumeric characters as well as spaces. GS searches the nonvolatile memory pool for the first occurrence of the image identified by <Name..>. If the image is found, it will be printed. If the image cannot be found, the command will be ignored. The following basic example demonstrates how to print the stored bit-image named "MY IMAGE":	

```
PRINT #1        CHR$(29), CHR$(48)        REM Enter the GS 0 command
PRINT #1        "MY IMAGE", CHR$(0)       REM Enter the image name
```

Function	**Erase single entry from nonvolatile memory**	**EPOS ONLY**
ASCII	GS 1 <Name..> <0>	
Hexadecimal	1DH 31H <Name..> 0H	
Decimal	<29> <49> <Name..> <0>	
Range	<Name> = a 15-byte maximum alphanumeric name to identify the image	
Description	GS 1 deletes a single entry (bit-image or character set) from storage in the nonvolatile memory pool.	

Function	**Erase all entries from nonvolatile memory**	**EPOS ONLY**
ASCII	GS 5	
Hexadecimal	1DH 35H	
Decimal	<29> <53>	
Description	GS 5 erases the entire contents of the nonvolatile memory pool and frees up the memory for new entries.	
Note 1	No protection for the GS 5 command exists. All user store will be erased!	

Function	**Define single user-defined bit-image**	**EPOS ONLY**
ASCII	GS * x y d_1 … d(x *x* y *x* 8)	
Hexadecimal	1DH 2AH x y d_1 … d(x *x* y *x* 8)	
Decimal	<29> <42> x y d_1 … d(x *x* y *x* 8)	
Range	$1 \le x \le 255$ $1 \le y \le 48$ $0 \le d \le 255$	

Description The GS * x y d_1 … d(x *x* y *x* 8) command defines a single downloaded bit-image using the number of dots specified by x and y in the RAM buffer area (volatile memory). The number of dots in the horizontal direction is x *x* 8. The number of dots in the vertical direction is y *x* 8. If (x *x* y *x* 8) exceeds the size of the buffer, the image is truncated. d indicates bit-image data and specifies a bit printed to one and not printed to zero. After a downloaded bit-image is defined, it may be saved to the nonvolatile flash storage buffer using the ESC ‘ command where it remains indefinitely. Otherwise, the image remains in the RAM buffer where it is available until ESC @ or ESC & is executed; the power is turned off; or the printer is reset. A representation of the format of a downloaded bit-image is depicted below.

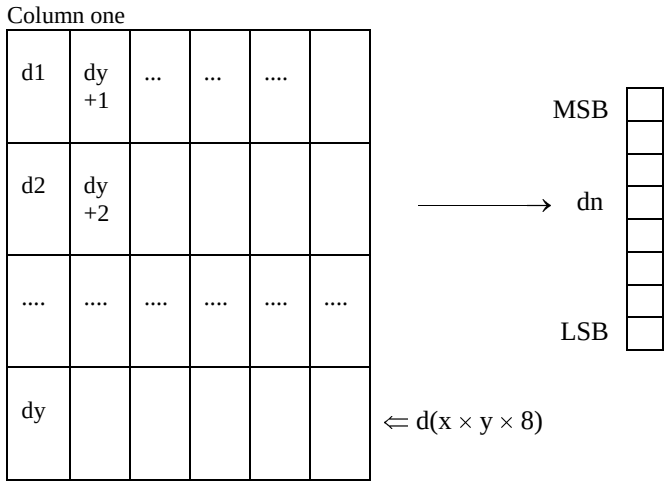

Function	**Print single user-defined bit-image**	**EPOS ONLY**
ASCII	GS / <m>	
Hexadecimal	1DH 2FH <m>	
Decimal	<29> <47> <m>	
Description	The GS / <m> command prints a downloaded or stored bit-image using the mode specified by <m>. <m> selects a mode from the table below.	

Hex	Decimal	Mode	Vertical Dot Density (dpi)	Horizontal Dot Density (dpi)
00	0	Normal	203	203
01	1	Double-wide	203	101
02	2	Double-high	101	203
03	3	Quadruple	101	101

Table 75 User-defined Bit-image Resolutions

Function	**Save user-defined character set**	**EPOS ONLY**
ASCII	GS 6 <Name..> <0>	
Hexadecimal	1DH 36H <Name..> 0H	
Decimal	<29> <54> <Name..> <0>	
Range	<Name> = a 15-byte maximum alphanumeric name to identify the image.	
Description	GS 6 <Name..> <0> saves the current character set created by the [ESC] & command to the nonvolatile memory pool. If no character set has been defined, the command stores an empty definition structure.	

Function	**Select user-defined character set**	**EPOS ONLY**
ASCII	GS 7 <Name..> <0>	
Hexadecimal	1DH 37H <Name..> 0H	
Decimal	<29> <55> <Name..> <0>	
Range	<Name..> = a 15-byte maximum alphanumeric name to identify the image.	
Description	GS 7 <Name..> <0> selects a previously saved user-defined character set. If the character set does not exist, the command is ignored.	

Function	**Query nonvolatile memory pool information**	**EPOS ONLY**
ASCII	GS 3	
Hexadecimal	1DH 33H	
Decimal	<29> <51>	
Description	The GS 3 command prints a summary of the user-store usage. It is intended to help with the generation and maintenance of user store.	
Note 1	The report is printed as part of the configuration report.	

Ithaca® Specific POSjet® Commands

The POSjet® 1500 has a number of Extended control commands designed to make operation and maintenance of the printer easier for the host application refer to the POSjet® Extended Control discussion on page 271.

Panel Button Commands

Function	**Enable/disable paper feed**
ASCII	[ESC] p 5 <n>
Hexadecimal	1BH 70H 35H <n>
Decimal	<27> <112> <53> <n>
Range	0 ≤ n ≤ 255
Description	The [ESC] c 5 <n> command enables or disables the FEED button.
Where <n>	Bit 0 = 1 the FEED button is disabled Bit 0 = 0 the button is enabled.

Paper Out/Low Sensor Commands

Function	**Paper low sensor**
ASCII	[ESC] p 4 <n>
Hexadecimal	1BH 70H 34H <n>
Decimal	<27> <112> <52> <n>
Range	0 ≤ n ≤ 255
Description	The [ESC] c 4 <n> command determines if the printer stops printing when paper low is detected.
Where <n>	0 Printer continues to print with paper low. 1 Printer stops printing when paper low is detected.

Function	**Paper Error Signal Control**
ASCII	[ESC] p 3 <n>
Hexadecimal	1BH 70H 33H <n>
Decimal	<27> <112> <51> <n>
Range	0 ≤ n ≤ 255
Description	The [ESC] c 3 <n> command controls how the Paper Error pin on the parallel interface operates.
Where <n>	Bit 0 controls paper low operation. If Bit 0 = 1 Paper low will set the Paper Error pin. If Bit 0 = 0 Paper low will not effect the Paper Error pin. Bit 2 controls how paper out effects the Paper Error pin. If Bit 0 = 1 Paper out will set the Paper Error pin. If Bit 0 = 0 Paper out will not effect the Paper Error pin.

Note: The paper out sensor will all ways stop printing.

The default setting allows only Paper out to control the Paper Error pin.

The Epson section has the following description of the Enable/disable paper feed command.

Description The [ESC] c 5 <n> command enables or disables the FEED Button. When the least significant bit (LSB) of <n> = one, the FEED button is disabled; when it is zero, the button is enabled.

Section 11: POSjet® Color Graphics

Printing Graphics

The POSjet® 1500 Printer has bit-image graphic capability and a full PC-compatible graphic character set. The bit image format is similar to that used on other personal computer printers. Three modes of operation are available. Single-density is the fastest mode. It makes a single unidirectional 60 dpi print pass. Full-speed double-density mode makes two passes with a half-dot offset. Full-speed double-density mode is half the speed of single-density mode, but it prints at 120 dpi. Half-speed double-density mode is half the speed of full-speed double-density; however, the print quality is enhanced.

Character Graphics

Character graphics is the term for joining individual characters together to produce a mosaic of characters that form a graphic image. The simplest method uses an * (or any other character) to form an image. For example, ITHACA® might be formed as follows.

```
***   ***   *    *    **     ***     **
 *     *    *    *   *  *   *    *   *  *
 *     *    *****   ****   *        ****
 *     *    *    *   *  *   *    *   *  *
***    *    *    *   *  *    ***    *  *
```

Figure 39 Example of Character Graphics

The printer's extended character set supports line graphic characters that can be combined to form windows and other shapes. For the shapes to join from line to line, the spacing must be set properly.

All characters are in a nine-dot-high character cell. The dots are 1/60 inch apart. Therefore, the line spacing should be 10/60 or 1/6 inch. The set fine line space command can be used to set the line spacing. If possible, the spacing should be reduced slightly to overlap the rows, which prevents any white spacing from appearing between the lines. The following example illustrates the use of extended character graphics.

```
[ESC]:
[ESC]3<27>
[ESC]a<1>
<201>
<205><205><205><205><205><205><205><205><205>
<205><205><205><205><205><205><205><205><205>
<205><205><205><205>
<187>[CR][LF]
<186>    PcOS PRINTERS     <186>[CR][LF]
<186>                      <186>[CR][LF]
<186>    MADE TO ORDER     <186>[CR][LF]
<186>    BUILT TO LAST     <186>[CR][LF]
<200>
<205><205><205><205><205><205><205><205><205>
<205><205><205><205><205><205><205><205><205>
<205><205><205><205>
<188>[CR][LF]
[ESC]a<0>
[ESC]0
[ESC][P<15>
[CR][LF]

ST# 2000  OP# 00067  TE# 021 0035[CR][LF]
KLEENEX FAM  D04 QTY 1     1.68 J[CR][LF]
RITZ         D01 QTY 1     2.50 D[CR][LF]
CHIPS        D01 QTY 1     1.50 D[CR][LF]
STORAGE BAG  D04 QTY 1     1.50 J[CR][LF]
               SUB TOTAL   7.18[CR][LF]
               SALES TAX 1  .50[CR][LF]
                         ------[CR][LF]
               TOTAL       7.68[CR][LF]
               CASH TEND  20.00[CR][LF]
               CHANGE DUE 12.23[CR][LF]
[CR][LF]
[ESC]a<1>
THANK YOU FOR SHOPPING WITH US[CR][LF]
[ESC]a<0>
[CR][LF]
{DATE:0}         {TIME:0}[CR][LF]
[ESC]d<10>
```

Figure 40 Example Commands for a Sample Receipt

```
        PcOS PRINTERS


ST# 2000  OP# 00067  TE# 021 0035
KLEENEX FAM  D04 QTY 1      1.68 J
RITZ         D01 QTY 1      2.50 D
CHIPS        D01 QTY 1      1.50 D
STORAGE BAG  D04 QTY 1      1.50 J
               SUB TOTAL    7.18
               SALES TAX 1   .50
                            -----
               TOTAL        7.68
               CASH TEND   20.00
               CHANGE DUE  12.32

   THANK YOU FOR SHOPPING WITH US

November 11, 1999         10:02:37.34
```

Figure 41 Sample Receipt

When printing line graphics, the data path to the printer must be eight bits. Seven-bit serial protocols do not access the extended characters. The extended characters require that the form be reverse fed. Consequently, printing line graphics on the receipt may be less than acceptable.

APA Graphics

The printer is capable of all-points-addressable (APA) or horizontal graphics. Generating a graphic image by hand is time consuming and tedious. It is recommended that a graphic package be used to create a graphic image. The following procedure will help with the setup.

Procedure for APA graphics:

1. Generate the graphic image in the program of your choice. APA graphics only support monochrome images.

2. Make sure the paper size chosen fits the printer (3 inches wide with 0.25-inch margins). If the paper size cannot be set, print a portion of the page.

3. Print the graphic to a file using a generic, IBM, graphic, 9-pin driver. The standard IBM resolutions are 240 x 216 dpi, 120 x 72 dpi, and 60 x 72 dpi. The POSjet® 1500 Printer supports all three resolutions. For good resolution with reasonable speed, use 120 x 72 dpi.

4. Print the graphic image to a file.

5. Edit the resulting file to remove any unwanted form control, and insert the POSjet® 1500 form control.

6. Make the resulting file available to your application, so it can be sent to the printer when required.

Color Graphics

The POSjet® 1500 is a two-color printer as rather than a full color printer. A full color printer forms the various colors of an image by mixing inks of different colors on the paper. The amount of each color determines the hue. Typically the paper is white and no ink produces a white. Mixing yellow and cyan produces a red and mixing cyan, magenta, and yellow in equal amounts produces a black or gray. If the printer has a forth cartridge, it will be black and conserves the color cartridges ink.

The POSjet® 1500 is a two-color printer. It has white (the paper), and two premixed colors. Typically one of the colors is black and a highlight color. The high light color is primarily used in text printing to highlight a line and typically is red.

When the POSjet® 1500 generates graphics, both cartridges are used to generate the image. Because the program that generates the graphic image data should not need to be aware of the cartridges installed in the printer, three-color plains are sent to the printer. The printer is aware of what colors the cartridges are that will generate the image. The printer will converts the full color image information into a two-color image.

If the POSjet® 1500 printer is configured with a black cartridge and a highlight color, there is no point in the printers mixing the highlight color with black. If however, the POSjet® 1500 printer is configured with two colored cartridges, the printer attempts to mix the colors to generate black. (Note that in text mode the cartridges are not mixed.) This requires that there be two basic modes of color graphic generation.

If the POSjet® 1500 printer is configured with a black cartridge it must be in the left print cartridge position. In this mode, the printer will not mix colors and the resulting image will be composed of black dots or highlight color dots.

If the POSjet® 1500 printer is configured with two color cartridges, the printer will mix the two installed inks on the paper. In this case, the left cartridge is assigned to the primary color and the right cartridge to the secondary color. Because there are three primary colors, the printer is unable to print full color. The printer follows the rules for mixing colors and it if the result is ambiguous (because of the missing color), the printer will print with the primary (left) cartridge. This results in a image made up of primary color dots, secondary color dots and mixed dots. The mixed dots color may not be black but a mixture of whatever colors are installed.

In text mode, the Primary cartridge (Left) is assigned as the default color and the Secondary cartridge (Right) is assigned as the alternate highlight color. In most cases the darkest color should be placed in the primary cartridge (Left) position.

The Ithaca® Windows print driver provides the translation from Windows color to the three-color plains. When a graphic is created for the POSjet® 1500 Printer, the colors used must take into account that colors other than the pen color will print black. The Ithaca® Windows driver helps adjust the color content and generates the desired print from a full color image. *(Ithaca® Windows print driver patent pending.)*

Procedure for color horizontal graphics:

Note: See the section on Universal Color Graphics for more options.

9. Generate the graphic image in the program of your choice. Use colors consistent with the two colors installed in the printer.

10. Optionally, process the color image with the Ithaca® color image processor. The program can print the image or generate a printable file.

11. Make sure the paper size you pick fits the printer (3 inches wide with 0.25-inch margins).

12. The POSjet® 1500 print driver should be installed (even if the printer is not connected).

13. Set up the print driver to print the graphic to a file using whatever resolution required.

14. Print the graphic image to a file.

15. When you want to print the graphic, simply copy the file to the printer.

16. You may copy the graphic to the graphic save buffer and then request the printer to retrieve and print it without re-sending the graphic data.

(Ithaca® Color Image Processor is patent pending.)

Figure 42 Receipt with graphics

As with all graphics, the data path to the printer must be eight bits. Seven-bit protocols do not work.

POSjet® Universal Color Graphics

Starting with Version 1.88 of the POSjet® 1500 Printer firmware supports the ability to print two color graphics in all emulations. This support is an enhancement to the original TM-U325D, ESC/POS, Star, Citizen and the Ithaca M50 and Microline printer emulations.

The intent of Universal Color Graphic support is to allow the POSjet® 1500 color graphics capability to be used in existing applications that do not support color graphics.

There are several ways to add color graphics to an existing application. The easiest for you will depend on how much control you have over your application. At a minimum, you should be able to change the name printed on the top of a receipt. With the PJColor II[30] program you can store a named graphic into the printer an print it by changing the text name to match the stored graphic. For example, if your receipt has a name like "Joe's Market", you can save a graphic in the printer named "Joe's" and then change the "Joe's Market" to "&%Joe's&" When the POSjet® 1500 finds "&%Joe's&", it is replaced with the stored graphic.

Some applications allow a graphic file to be sent to the printer. In this case PJColor II can generate the graphic file and then your application can send it to the printer. This file will support two color print.

PJColor II also has a feature that will allow you to generate a file that will define the graphic to be stored into the printer. You can then use this file to setup any number of printers with the same graphic.

If you are using a windows print driver (other than the Transact POSjet® 1500 driver) to support your printer, you will not be able to send color graphics to the printer through the print driver. The print driver will not support universal color graphics. You can however, store the graphic in the printer and use IPCL commands to print the stored graphic. (You must select a printer resident font for this to work.)

The following is a short summary and how to description of these features.

Print File Graphics

PJColor II can generate a print file that may be sent to the printer in any emulation and produce a two color print graphic.

To generate a print file.

1) Start PJColor II
2) Under Settings, Select the POSjet® 1500 printer. Then select the emulation that maches the printer.
3) Select the Resolution you would like to have the printer use to print the graphics. Low resolutions are faster, high resolutions produce better graphics.
4) Load the graphics Image you wish to print.
5) Select the Communications port and configuration.
6) Adjust the image to produce the effect you would like. The lower graphic window displays an approximation of the printed image.
7) When you are satisfied with the graphic, press the "Print to a File" button. PJColor II will ask what file you would like to receive the print data.
8) This file can be sent to the printer and the graphic will be printed.

[30] The PJColor II program has been enhanced to provide several ways to create color Logos and Coupons and make them available to the POSjet® 1500 printer.

Store Graphics in the printer:

PJColor II can store a graphic in the POSjet® 1500 Printer or generate a file that will store a graphic in the printer.

To Store a graphic in the printer

1) Start PJColor II
2) Under Settings, Select the POSjet® 1500 printer. Then select the emulation that you will be setting the printer to.
3) Select the Resolution you would like to have the printer use to print the graphics. Low resolutions are faster, high resolutions produce better graphics.
4) Select the communications port and protocol that is to be used to communicate to the printer.
5) Load the graphics Image you wish to print.
6) Adjust the image to produce the effect you would like. The lower graphic window displays an approximation of the printed image.
7) When you are satisfied with the graphic, press the "Store in Printer" button. PJColor II will attempt to interrogate the printer and will display the graphics currently in the printer if any. (Note: If PJColor II cannot communicate with the printer, only the "Save to File" option will be allowed.)
8) Make sure there is enough room in the printer for the graphic.
9) Insert a name in the "Macro Name" box. Keep it simple, this name will be used later to print the graphic.
10) Record the graphic in the printer.

Print a stored graphic.

In the data stream to the printer enter "&%Name&" and the graphic will print in place of the "&%Name&" data. The "Name" must be identical to the name entered earlier.

Generate a file to store graphics into a printer

To generate a file that will store a graphic into a printer, follow the same procedure to store a graphic in a printer up through step 8. Then:

9) Insert a name in the "Macro Name" box. Keep it simple, this name will be used later to print the graphic
10) Press the "Save to File" button. This will allow you to select a file where the stored universal graphic information is saved.
11) This file contains an "erase any previous graphic with the same name" command, "a save new graphic with this name" command and the graphics information.
12) This file can then be sent to the printer and the graphic will be saved in the printer. Note: If the target printer does not have enough room for the graphic information to be stored, the graphic will not be stored.

How universal graphics is done

The printer extends all the emulations to support two additional escape sequences and adds limited IPCL support.

IPCL (Ithaca Printer Control Language) is an ASCII method of sending printer commands to the printer. In Ithaca PcOS emulation, IPCL command support is extensive. In other emulations, IPCL support is limited to the following commands.

&%CR	Insert a [CR]
&%LF	Insert a [LF]
&%CLx	Select Color where x = 0 for the Left Pen or 1,2,3 for the Right Pen
&%UBName&	Begin defining universal graphic "Name"

&%UGName& End the definition of "Name"
&%URName& Run (print) universal graphic "Name"
&%UDName& Remove universal graphic "Name" from nonvolatile memory
&%USName& Flag universal graphic "Name" to be run when the printer is turned on &%UFALL& Erase all stored universal graphics. (Erases all User Store)
&%UQ& Prints a directory of the universal graphics currently stored in the printer
&%UTx Changes the Name termination character from "&" to "x". "x" may range from 21H to 255H

The extended Escape sequences are [ESC][US]… and [ESC][FS]…

The [ESC][US] commands are the same as the PcOS emulation. The [ESC][FS] commands are not intended to be used by the customer. They provide the universal graphics support. Because graphics would be very difficult to generate and are not supported by any graphics drives other than PJColor II.

How to use IPCL commands in text strings

If your software allows you to pass text strings to the printer, you should be able to use the universal graphics commands. Most POS software allows user customization of the text message printed at the beginning and the end of the receipt.
To use the Universal IPCL commands simply place them in a text string like the following example.
Note: Your results may vary depending on the operation system, software and the ability to pass ASCII Characters.

Load and store named graphic image

First you must create the graphic image using the PJColorII Color Image Converter and save the image to a file. See "**Generate a file to store graphics into a printer**" section above

Send the following text strings to the printer using whatever means is available to you.

&%UBLogo& Begin defining macro "Logo"
&%UGLogo& End the Definition of "Logo"
&%UMLogo& Save Macro "Logo" to nonvolatile memory

A graphic image named "Logo" should now be stored in the nonvolatile memory.
To verify the image is present, use the "&%UQ&" IPCL command or the PJColorII Color Image Converter to print the name and size of the stored images.

Recall and print stored named graphic image

Send the following text string to the printer using whatever means is available to you.

&%URLogo& Run Macro "Logo" (Print the macro)

Cautions

Universal graphics information is stored in the same place as user defined characters and user defined macros. If you are using an emulation such as ESC/POS that supports macros and/or user defined characters, universal graphics will compete for space with these functions. In addition, the "&%UFALL&" (Erase universal graphics) will also erase any user defined graphics and macros.

If you are using the Ithaca PcOS emulation, these commands are identical with the User Store commands except for the terminator character. You may change the NUL terminator to "&" with "&%UT&" if you find the "&" easier.

Universal Color Command Descriptions

Function	**Begin named universal graphic record**
IPCL	&%UB <Name..>&
Description	The &%UB <Name..>& command initializes the universal graphic buffer structure, and redirects the following data to the universal graphic buffer. It uses the <Name..> field as a reference. If the name already exists in the flash user store, the command is ignored. The command must be followed by the "End name universal graphic record" command with the same name. If the data that follows is larger than the universal graphic buffer (about 16K), the universal graphic definition is terminated without saving any data.

Function	**End named universal graphic record**
IPCL	&%UG <Name..>&
Description	The &%UG <Name..>& command ends the universal graphic record operation and saves the universal graphic to flash. It uses the <Name..> field to verify the command end and must match the "Begin named universal graphic record" command. If the name already exists in the flash user store or the universal graphic memory is exceeded, the command is invalid, and the <Name..> field prints.

Function	**Run universal graphic data from user store**
IPCL	&%UR <Name..>&
Description	The &%UR <Name..>& command loads the referenced universal graphic into the universal graphic buffer. The universal graphic buffer is then inserted into the data stream. If the named item does not exist or is not a universal graphic, the POSjet®1500 ignores the command.

Function	**Flag item as a start-up universal graphic**
IPCL	&%US <Name.. >&
Description	The &%US <Name.. >& command flags the referenced item to `be processed at startup. Only one user character definition and one universal graphic may be flagged to run at startup.

Function	**Delete item from user store**
IPCL	&%UD <Name..>&
Description	The &%UD <Name..>&command removes an item from user store and frees up space. If the item does not exist, the POSjet®1500 ignores the command.

Function	**Flush information from user store**
IPCL	&%UFALL&
Description	The &%UFALL& command clears all entries in user store and frees the data space. It must have the name, “ALL” (in uppercase) attached.

Function	**Report on user store**
IPCL	&%UQ&
Description	The &%UQ& command prints a status report. The intention of the command is to aid in universal graphic development.

Function	**Redefine User Store Termination Character**
IPCL	&%UT<n>
Description	This command allows the terminator used to signal the end of the name field in User Store commands to be modified. The value of <n> is used for the terminator. The value of n may be from 0 to 255.
Example	If &%UT% were sent to the printer the User Store command to run universal graphic "Demo" would be &%URDemo%.

Function	**Set Print Color**
IPCL	&%CL <n>
Description	This command allows various colors to be selected on printer emulations that do not support color text.
Where n:	0 Print with the Left cartridge (Typically Black) 1, 2, 3 Print with the Right cartridge (Typically Red, Blue, or Green)

Section 12: POSjet® Extended Printer Control

The POSjet® 1500 printer has a number of Extended Control commands that allow an application to better track and maintain the printer. These commands are in all emulations[31].

The printer maintains a log of printer activity. This activity may be returned to the host with the [ESC]~ T command. This command returns a ~T followed by four binary bits that make up a 32 bit unsigned integer. The description of the command below describes the format in full.

The printer also contains a number of commands that will force the printer to perform specific functions to help maintain the printer or print information about the printer. The functions available are:

1) Reset Cartridge Ink Status
2) Print Current Configuration
3) Print current log totals
4) Print current alignment values

NOTE: all of these commands follow the ESC~ or ESCy format. Other functions are performed by these basic commands. Do not attempt to use any undocumented version of these commands. The extended diagnostics commands may affect the print quality and performance of the printer. In some cases, the commands may degrade the performance of the print cartridge or mechanism.

Function	**Reset Cartridge Ink Status**
ASCII	[ESC] ~ H <n>
Hexadecimal	1BH 7EH 48H <n>
Decimal	<27> <126> <72> <n>
Description	This command allows the host system to operate the Cartridge Changed operation under program control. This command will unconditionally inform the printer that the cartridge has been changed. If <n> = 1 or <1> The black or left cartridge is reset. In <n> = 2 or <2> the color or right cartridge is reset.
Note	It must be noted that this command will reset the ink status even if the cartridge has not been replaced. If this occurs the Ink low warning will not be accurate.

[31] The Star emulation does not allow the use of ESC y commands for extended diagnostics. The ESC y commands are not available.

Function **Read and return totals**

ASCII [ESC] ~ T <n>
Hexadecimal 1BH 7EH 54H <n>
Decimal <27> <126> <84> <n>

Description This command returns the current statistics for parameter n. The value returned will be ~T<n> with the next 4 bytes being an unsigned int . For example:

[ESC]~T<1> Request Cover open count

Returns: **~T<1><0><0><1><100> or 256 + 100 or 356 cover opens**

Values of n **Request:**

0	Total Cartridges used	9	Monitor Resets
1	Cover Opens	10	Head Index Errors
2	Paper Outs	11	Auto Cutter Cycles
3	Line Feed	12	Host Initialization Requests
4	Characters Printed	13	Error Vectors taken
5	Cash Drawer 1 Opens	14	Auto Cutter Faults
6	Cash_Drawer 2 Opens	15	Power On Time (Min.)
7	OFF Power Cycles	16	System Active Time (Min.)
8	Power Ups from reset	17	Slips Inserted

Function: **Set Cartridge Color**

ASCII: [ESC] ~ R<c> or [ESC] ~ L<c>
Hex: 1BH 7EH 52H or 1BH 7EH 4CH
Decimal: <27><126><82> or <27><126><76>

Description: This command reconfigures the cartridge colors. This command should only be use when the colors of the installed cartridges are changed. This configuration must match the cartridge colors as specified by the PJColor program for the color graphics to match the PJColor preview.

[ESC] ~ L<c> sets the left or primary color and [ESC] ~ R<c> sets the right or secondary color.

You can set the Left cartridge to any color and you can set the right cartridge color to any color but black.

Cartridge Color	<c> in Decimal	<c> in Hex
RED	1	01H
GREEN	2	02H
BLUE	4	04H
BLACK	16	10H
COLOR READY	16	10H

NOTE: You can not specify black for both cartridges. This configuration is reserved for a color ready printer.

NOTE: These commands change the configuration of the printer that is stored in nonvolatile memory. The values take effect immediately and will remain until changed by these commands.

Function	**Print Current Configuration and totals**
ASCII **Hexadecimal** **Decimal**	[ESC] y <9> 1BH 79H 09H <27> <121> <9>
Description	This command forces the printer to print the current configuration. To function correctly it must be issued with the printer in the proper mode. It is intended to be printed in the default Ithaca® configuration but will print in any configuration.
NOTE:	**This command must be preceded with an ESC y <8>**

Function	**Print Current totals**
ASCII **Hexadecimal** **Decimal**	[ESC] y <15> 1BH 79H 0FH <27> <121> <15>
Description	This command forces the printer to print the current totals log.
NOTE:	**This command must be preceded with an ESC y <8>**

Function	**Print Current Alignment values**
ASCII **Hexadecimal** **Decimal**	[ESC] y <20> 1BH 79H 14H <27> <121> <20>
Description	This command forces the printer to print the current alignment values.
NOTE:	**This command must be preceded with an ESC y <8>**

Function	**Overlay the Small Draft font with Cartridge test characters**
ASCII **Hexadecimal** **Decimal**	[ESC] y <16> 1BH 79H 10H <27> <121> <16>
Description	This command forces the printer to replace characters 224 through 255 with test characters. Once installed these characters can be removed by reselecting the code page. Only the Small draft font is effected.

Appendix A: Common Operational Questions (FAQ's)

Task	Approach
Change Paper Rolls	Open the printer's front paper cover. Insert the new paper roll so that it unwinds from the bottom and rests on the top of the front cover and aligns with the paper stop on the front cover. Close the paper cover. The paper will load automatically. See "Installing a New Paper Roll Using Insta-Load™", on page 18.
Feed Paper	**Press** and **release** the FEED Button for a single line. **Press** and **hold** the FEED Button for continuous feed.
Change Ink Cartridges *DO NOT USE ANYTHING OTHER THAN NEW CARTRIDGES WHEN REPLACING EMPTY CARTRIDGES*	Open the printer's front cover. Take the ink cartridge(s) out of the carriage system and replace with new cartridge(s). Press and release the NEW CARTRIDGE Button. See "Installing Ink Cartridges", on page 16.
Clean Ink Cartridges	**Press** and **release** the NEW CARTRIDGE Button 2-3 times. If the cartridge still is not working correctly, replace the cartridge(s).
Print Ink Level Status	**Press** and **release** the NEW CARTRIDGE Button.
Cycle Through Configuration Menu	Follow the directions that print on the configuration summary receipt after entering Configuration Mode.
Save Configuration Settings	**Press** and **release** the * Button at any time.
Exit Self-Test Mode	**Press** and **release** the * Button at any time.
Exit Configuration Mode	**Press** and **release** the * Button at any time.
Turning Printer ON	**Press** and **release** the * Button.
Turning Printer OFF	**Press** and **release** the * Button.
Removing Ink Low Warning After Installing New Ink Cartridges	**Press** and **release** the NEW CARTRIDGE Button immediately after installing the new ink cartridge(s).
Placing Printer Into Self-Test Mode	1. **Press** and **release** the * Button to place the printer into STANDBY/OFF mode. (The POWER INDICATOR LIGHT will be off.) 2. **Press** and **hold** the NEW CARTRIDGE Button. 3. **While holding** the NEW CARTRIDGE Button, **press** and **release** the * Button. 4. When the red, ERROR INDICATOR LIGHT blinks, **release** the NEW CARTRIDGE Button. 5. Follow the directions printed on the receipt to select the desired TEST option.
Entering Configuration Mode	1. Unplug the power cord from the printer. 2. **Press** and **hold** the FEED Button and plug the power cord back into the printer. 3. Continue to **hold** the FEED Button until the ERROR INDICATOR LIGHT begins to blink. 4. **Release** the FEED Button. A receipt will print. This Configuration Summary Receipt shows how your printer is configured. Follow the directions at the bottom of the receipt to change and save settings. 5. See "Understanding Configuration Mode" on page 38.

Table 76 Common Operator's Questions (FAQ's)

Appendix B

ASCII Code Table

Hex	Decimal	ASCII	Hex	Decimal	ASCII	Hex	Decimal	ASCII	Hex	Decimal	ASCII
00	0	NULL	20	32	(SP)	40	64	@	60	96	`
01	1	SOH	21	33	!	41	65	A	61	97	a
02	2	STX	22	34	"	42	66	B	62	98	b
03	3	ETX	23	35	#	43	67	C	63	99	c
04	4	EOT	24	36	$	44	68	D	64	100	d
05	5	ENQ	25	37	%	45	69	E	65	101	e
06	6	ACK	26	38	&	46	70	F	66	102	f
07	7	BEL	27	39	'	47	71	G	67	103	g
08	8	BS	28	40	(	48	72	H	68	104	h
09	9	HT	29	41	)	49	73	I	69	105	i
0A	10	LF	2A	42	*	4A	74	J	6A	106	j
0B	11	VT	2B	43	+	4B	75	K	6B	107	k
0C	12	FF	2C	44	,	4C	76	L	6C	108	l
0D	13	CR	2D	45	-	4D	77	M	6D	109	m
0E	14	SO	2E	46	.	4E	78	N	6E	110	n
0F	15	SI	2F	47	/	4F	79	O	6F	111	o
10	16	DLE	30	48	0	50	80	P	70	112	p
11	17	DC1	31	49	1	51	81	Q	71	113	q
12	18	DC2	32	50	2	52	82	R	72	114	r
13	19	DC3	33	51	3	53	83	S	73	115	s
14	20	DC4	34	52	4	54	84	T	74	116	t
15	21	NAK	35	53	5	55	85	U	75	117	u
16	22	SYN	36	54	6	56	86	V	76	118	v
17	23	ETB	37	55	7	57	87	W	77	119	w
18	24	CAN	38	56	8	58	88	X	78	120	x
19	25	EM	39	57	9	59	89	Y	79	121	y
1A	26	SUB	3A	58	:	5A	90	Z	7A	122	z
1B	27	ESC	3B	59	;	5B	91	[	7B	123	{
1C	28	FS	3C	60	<	5C	92	\	7C	124	|
1D	29	GS	3D	61	=	5D	93	]	7D	125	}
1E	30	RS	3E	62	>	5E	94	^	7E	126	~
1F	31	US	3F	63	?	5F	95	_	7F	127	(sp)

Code Page Definition Table

Code Page	Country Code/ Language Set	Decimal <n_1><n_2>	Hex <n_1><n_2>	ASCII <n_1> <n_2> <n_3>	Epson ID
64	USA (Slashed 0)	0,64	0H,040H	0,0,6,4	NA
65	USA (Unslashed 0)	0,65	0H,041H	0,0,6,5	NA
66	British	0,66	0H,042H	0,0,6,6	3
67	German	0,67	0H,043H	0,0,6,7	2
68	French	0,68	0H,044H	0,0,6,8	NA
69	Swedish I	0,69	0H,045H	0,0,6,9	5
70	Danish I	0,70	0H,046H	0,0,7,0	NA
71	Norwegian	0,71	0H,047H	0,0,7,1	NA
72	Dutch	0,72	0H,048H	0,0,7,2	14
73	Italian	0,73	0H,049H	0,0,7,3	NA
74	French Canadian	0,74	0H,04AH	0,0,7,4	13
75	Spanish I	0,75	0H,04BH	0,0,7,5	NA
76	Swedish II	0,76	0H,04CH	0,0,7,6	15
77	Swedish III	0,77	0H,04DH	0,0,7,7	16
78	Swedish IV	0,78	0H,04EH	0,0,7,8	17
79	Turkish	0,79	0H,04FH	0,0,7,9	18
80	Swiss I	0,80	0H,050H	0,0,8,0	19
81	Swiss II	0,81	0H,051H	0,0,8,1	20
91	Welsh	0,91	0H,05BH	0,0,9,1	NA
93	Arabic	0,93	0H,05DH	0,0,9,3	93
437	USA	1,181	1H,0B5H	0,4,3,7	0
774	Baltic	3,6	3H,006H	0,7,7,4	74
850	Multilingual	3,82	3H,052H	0,8,5,0	26
852	East European Latin II	3,84	3H,054H	0,8,5,2	46
855	Cyrillic I	3,87	3H,057H	0,8,5,5	44
857	Turkey	3,89	3H,059H	0,8,5,7	57
860	Portugal	3,92	3H,05CH	0,8,6,0	28
861	Icelandic	3,93	3H,05DH	0,8,6,1	73
862	Hebrew NC	3,94	3H,05EH	0,8,6,2	60
863	Canada French	3,95	3H,05FH	0,8,6,3	43
865	Norway	3,97	3H,061H	0,8,6,5	27
866	Cyrillic II	3,98	3H,062H	0,8,6,6	45
869	Greek_869	3,101	3H,065H	0,8,6,9	47
895	Kamenicky (MJK)	3,127	3H,07FH	0,8,9,5	55

Code Page	Country Code/ Language Set	Decimal <n_1><n_2>	Hex <n_1><n_2>	ASCII <n_1> <n_2> <n_3>	Epson ID
1008	Greek 437	3,240	3H,0F0H	1,0,0,8	38
1009	Greek 928	3,241	3H,0F1H	1,0,0,9	39
1011	Greek 437 Cyprus	3,243	3H,0F3H	1,0,1,1	41
1012	Turkey	3,244	3H,0F4H	1,0,1,2	29
1014	Polska Mazovia	3,246	3H,0F6H	1,0,1,4	22
1015	ISO Latin 2	3,247	3H,0F7H	1,0,1,5	23
1016	Serbo Croatic I	3,248	3H,0F8H	1,0,1,6	24
1017	Serbo Croatic II	3,249	3H,0F9H	1,0,1,7	25
1018	ECMA-94	3,250	3H,0FAH	1,0,1,8	42
1019	Windows East Europe	3,251	3H,0FBH	1,0,1,9	49
1020	Windows Greek	3,252	3H,0FCH	1,0,2,1	50
1021	Latin 5 Windows Turkey	3,253	3H,0FDH	1,0,2,2	51
1022	Windows Cyrillic	3,254	3H,0FEH	1,0,2,4	52
1024	Hungarian CWI	4,0	4H,000H	1,0,2,5	54
1026	ISO Latin 4	4,2	4H,002H	1,0,2,6	56
1027	Ukrainian	4,3	4H,003H	1,0,2,7	66
1028	Roman-8	4,4	4H,004H	1,0,2,8	58
1029	ISO Latin 6	4,5	4H,005H	1,0,2,9	67
1031	Hebrew OC	4,7	4H,007H	1,0,3,0	61
1032	Windows Hebrew	4,8	4H.008H	1,0,3,2	62
1033	KBL-Lithuanian	4,9	4H,009H	1,0,3,3	63
1034	Windows Baltic	4,10	4H,00AH	1,0,3,4	68
1035	Cyrillic-Latvian	4,11	4H,00BH	1,0,3,5	69
1072	Bulgarian	4,48	4H,030H	1,0,7,2	72
NA	French				1
NA	Danish I				4
NA	Italian				6
NA	Spanish I				7
NA	Japanese				8
NA	Norwegian				9
NA	Danish II				10
NA	Spanish II				11
NA	Latin American				12

Index

(

(*) Button 3, 26
(USB) Universal Serial Bus 52

[

[BEL] Audio alert 190, 191
[BEL] Sound buzzer 242
[BS] Insert back space 125
[BS] Set back space 228
[CAN] Clear print buffer 189
[CR] Print and carriage return 215
[CR] Set carriage return 124
[DC2] Begin 10 cpi 131
[DC4] End one-line double-wide print 145
[DLE] ENQ <n> Real-time request to printer 244
[DLE] EOT <n> Transmit real-time status 234
[ENQ] <1> Inquire Cash Drawer 1 status 198
[ENQ] <10> Request printer reset 200
[ENQ] <11> Request printer power cycle status 200
[ENQ] <14> Inquire mechanical error status 201
[ENQ] <15> Inquire printer state 201
[ENQ] <16> Exit Validation wait 188
[ENQ] <20> Inquire all printer status 202
[ENQ] <21> Inquire printer ID 203
[ENQ] <22> Inquire Error Status 204
[ENQ] <23> Inquire user-store status 204, 205
[ENQ] <3> Inquire receipt paper low status 198
[ENQ] <4> Inquire receipt paper out status 199
[ENQ] <8> Inquire cover open status 199
[ENQ] <9> Inquire buffer status 199
[ENQ] <n> Inquire printer status 198
[ESC] - <1> Begin underline 145, 147
[ESC] - <n> Turn on/off underline mode 223
[ESC] \ <n_l> <n_h> Set relative print position 228
[ESC] ! <n> Select international character set 137
[ESC] ! <n> Select print mode(s) 223
[ESC] # <0> Begin 12 x 12 draft print 135
[ESC] $ <n_l> <n_h> Set absolute print position 228
[ESC] $ Cancel user-defined characters 143
[ESC] % <n> Select/cancel user-defined character set 217
[ESC] % G Begin italics 148
[ESC] % H End italics 148
[ESC] & <y> <c1> <c2> … Define user-defined characters 218
[ESC] * <m> <0> <0> Set horizontal graphics mode 164
[ESC] * <m> <n_1> <n_2> Print graphics in mode <m> 161
[ESC] * <m> <nl> <nh> <dl> … <dk>Select bit-image mode 230
[ESC] ? <m> <n> Reassign graphic mode 162
[ESC] ? <n> Cancel user-defined characters 218
[ESC] @ Initialize the printer 191, 243
[ESC] [@ ... Double-wide, double-high italics 146
[ESC] [C <n> Insert Euro character 140
[ESC] [P <n> Set character pitch 133
[ESC] [S... Redefine character set 141
[ESC] [T <n_h> <n_l> Select character code page 138
[ESC] [BEL] <n_1> <n_2> <n_3> Audio alert control 191
[ESC] [EM] B <n> Set bar code height 174
[ESC] [EM] J <n> Set bar code justification and HRI modes 174
[ESC] [SI] Begin 24 cpi 132
[ESC] [US] 1 <Name..> <0> Load item process 166
[ESC] [US] b <Name..> <0> Begin named macro record 165, 167
[ESC] [US] c <Name..> <0> Save user-defined characters 166, 168
[ESC] [US] d <Name..> <0> Delete item from user store 169
[ESC] [US] e <Name..> <0> End name macro record 167
[ESC] [US] e <Name..> <0> Remove item from user store 166
[ESC] [US] e <Name..> <0> Stop name macro record 165
[ESC] [US] f ALL <0> Flush information from user store 166
[ESC] [US] f ALL <0> Flush user store 166, 169, 214, 242
[ESC] [US] l <Name> <0> Load macro/character 168
[ESC] [US] m <Name..> <0> Save macro data 168
[ESC] [US] m <Name..> Save macro data 165
[ESC] [US] q <Name..> <0> Query user store 169
[ESC] [US] r <Name> <0> Run macro data 168
[ESC] [US] s <Name..> <0> Flag as a start-up macro 166
[ESC] [US] s <Name..> <0> Flag start-up macro 169
[ESC]] Reverse line feed 131
[ESC] ^ <n> Print control character 140, 222
[ESC] { <n> Turn on/off upside-down print mode 224
[ESC] < <n> Enable data pass through 193
[ESC] < <n> Enable print suppress 193
[ESC] < Return home 230
[ESC] <n> <n_1> <n_2> Set horizontal position 126
[ESC] = <n> Select peripheral device status 244
[ESC] = <y> <c_1> <c_2> … Define user-defined characters 142
[ESC] = y c_1 c_2…Define user-defined characters 166
[ESC] > <n> Enable user-defined characters 143
[ESC] 0 Set line spacing to 27/216 inch 127
[ESC] 1 <n> Set left margin 229
[ESC] 1 Set line spacing to 7/72 inch 128
[ESC] 2 Enable variable line spacing 128
[ESC] 2 Select default line spacing 217
[ESC] 3 <n> Set line spacing 217
[ESC] 3 <n> Set line spacing to n/216 inch 127
[ESC] 4 Begin italics 225
[ESC] 4 Set top of form 130
[ESC] 5 <01> Begin auto line feed 131
[ESC] 5 End italics 225
[ESC] 8 Disable paper out sensor 189
[ESC] 9 Enable paper out sensor 189

[ESC] a <n> Select justification 228
[ESC] a <n> Set justification..... 126
[ESC] A <n> Set variable line spacing to n/72 inch128
[ESC] b <n> ... Print bar code 172
[ESC] B <n_1> <n_2> … <n_i> 0 Set vertical tab stops 130
[ESC] Begin 12 cpi 131
[ESC] BEL Sound buzzer..... 242
[ESC] C [NUL] <n> Set form length in inches 131
[ESC] c <n> Select color..... 145
[ESC] C <n> Set form length in lines..... 130
[ESC] c 3 <n> Select paper sensor(s) to output paper-end signals 227, 252
[ESC] c 4 <n> Select paper sensor(s) to stop printing 226, 252
[ESC] c 5 <n> Enable/disable paper feed..... 225, 252
[ESC] d <n> Feed <n> lines at current spacing..... 128
[ESC] d <n> Print and feed <n> lines 215
[ESC] D <n_1> <n_2> <n_3> … <n_i> 0 Set horizontal tab stops 125
[ESC] D <n_1> … <n_k> NUL Set horizontal tab positions 229
[ESC] e <n> Print and reverse feed <n> lines 215
[ESC] E <n> Turn on/off emphasized mode 223
[ESC] E Begin emphasized print..... 147
[ESC] F End emphasized print..... 147
[ESC] f Select receipt station ..155, 156, 157, 158, 178
[ESC] g <0> Process user macro..... 171
[ESC] g <1> Start macro record..... 165, 171
[ESC] g <2> Stop macro record 165, 171
[ESC] g <3> Stop macro record and save 171
[ESC] G <n> Turn on/off double-strike mode 224
[ESC] G Begin enhanced print..... 147
[ESC] h <color> <length> <format> <data> Process color graphics..... 163
[ESC] h <color> <length> <format> <data> Process horizontal graphics..... 163
[ESC] H End enhanced print 147
[ESC] I <n> Set print quality mode..... 135
[ESC] i Partial knife cut 242
[ESC] J <n> Fine line feed 127
[ESC] J <n> Fine linefeed 180, 181, 182, 184, 185, 186, 187
[ESC] J <n> Print and feed paper..... 216
[ESC] j Print and reverse feed 216
[ESC] j Select validation mode 178
[ESC] K <n> Print and reverse feed <n> lines..... 216
[ESC] K <n_1> <n_2> Print single-density graphics .. 160
[ESC] k Eject slip..... 178
[ESC] L <n_1> <n_2> Print half-speed double-density graphics..... 160
[ESC] m D Request MICR data 178
[ESC] m Perform a partial knife cut..... 242
[ESC] p <m> <t_1> <t_2> Generate pulse..... 244
[ESC] P <n> Begin rotated font 136
[ESC] p 3 <n> Select paper sensor(s) to output paper-end signals 192
[ESC] p 4 <n> Select paper sensor(s) to stop printing 192
[ESC] p 5 <n> Enable/disable paper feed 191
[ESC] q <n> Query marker 190
[ESC] Q <n> Set right margin..... 230
[ESC] r <0> End rotated print.....151
[ESC] r <1> Rotate 90° 150
[ESC] r <11> Rotate 270° with two pass font 151
[ESC] r <13> Rotate 90° with two pass font and line formatting.....150
[ESC] r <15> Rotate 270° with two pass font and line formatting.....151
[ESC] r <3> Rotate 270° 150
[ESC] r <5> Rotate 90° with line formatting.....150
[ESC] r <7> Rotate 270° with line formatting.....150
[ESC] r <9> Rotate 90° with two pass font 150
[ESC] r <n> Rotate 90°, 180°, or 270° 149
[ESC] R <n> Select an international character set..218
[ESC] r <n> Turn color mode on/off 222
[ESC] R Reset horizontal and vertical tab stops 126, 130
[ESC] S <0> Select superscript 148
[ESC] S <1> Select subscript.....148
[ESC] s <n> Set rotated print line length.....151
[ESC] SP <n> Set right-side character spacing.....217
[ESC] t <n> Select character code table 222
[ESC] T End superscript or subscript 148
[ESC] U <0> Begin bidirectional print.....162
[ESC] U <1> Begin unidirectional print.....162
[ESC] U <n> Turn on/off unidirectional printing mode 229
[ESC] V <n> Set intercharacter spacing.....134
[ESC] V <n> Turn on/off 90° rotation mode.....224
[ESC] W <n> Double-wide, double-high mode 146
[ESC] w <n> Enable dynamic response 196
[ESC] x <n> Open cash drawer 190
[ESC] X <n_1> <n_2> Set left/right print margin 189
[ESC] y <11> OCR character enable.....143
[ESC] y <12> OCR character disable.....143
[ESC] y <n> Set feature control 194
[ESC] Y <n_1> <n_2> Print full-speed double-density graphics 160
[ESC] Z <n_1> <n_2> Print quad-density graphics.....161
[FF] Set form feed 130
[GS] a <n> Enable/disable Automatic Status Back 231
[GS] I <n> Transmit printer ID.....243
[GS] P x y Set horizontal and vertical motion units243
[GS] r <n> Transmit status 233
[GS] Start/end macro definition.....246
[GS] V <m> <n> Select cut mode and cut paper 242
[HT] Set horizontal tab 125, 228
[LF] Print and line feed.....215
[LF] Set line feed.....124
[SI] Begin 17 cpi.....132
[SO] Begin one-line double-wide print.....145
[SOH] <n> Begin multi-drop control 196
[VT] Set vertical tab 129

1

10 CPI Character Pitch, Beginning.....131
12 CPI Character Pitch, Beginning.....131
12 x 12 Draft Print Mode, Beginning 135
17 CPI Character Pitch, Beginning.....132

2

24 CPI Character Pitch, Beginning..... 132

A

Activate test characters..... 267
Active State 56
APA
Creating a Graphics File 69
APA Graphics, Printing..... 161
Appendix B
Most Frequently Asked Questions 268
Appendix D
Operational Troubleshooting 112
Application Development..... 117
Audio Alert, Configuring 191
Auido alert..... 191
Auto cut, Performing..... 190
Auto Line Feed, Beginning 131
Automatic Status back, Enable/Disable..... 231

B

Back Space..... 125
Bar Code Commands 239
Bar Code, Print..... 172
Bar Code, Set height..... 174
Bar Code, Set Justification, Print Direction..... 174
Bar Codes..... 172
Begin Italics 148
Bidirectional Printing, Beginning..... 162
Bit Image Mode, Selecting..... 230
Bit-Image Command..... 230
Boot Loader Mode 35

C

Cables
Restraints 7
Canadian Radio Interference Statement iii
Care of Ink Cartridges..... 28
Carriage Return 124
Cartridge Ink status, Resetting 265
Cartridge Status 29
Cash Drawer 1 Status, Inquire..... 198
Cash drawer cable
connecting..... 9
Cash Drawer Drivers 107
Cash drawer, Opening 190
Change User Store Terminator..... 170
Changing Interface Cards..... 20
Changing Printer Configuration 19
Chapter 1
Printer Flow Control and Print Buffers..... 49
Chapter 2
Port Protocol and Connection Specifics 52
Chapter 3
Recovery from Mechanical Errors 110
Chapter 4
Printing Color and Printing via Print Drivers
Printing 66
Character attributes.....145
Character Code Page, Setting 138
Character Code table, Selecting.....220
Character Code Table, Selecting.....222
Character Commands 217
Character Pitch 101
Character Pitch, Setting 133
Character Set, Redefining.....141
Character Spacing, Setting.....217
Citizen Emulation.....117
Code Page Definitions.....270
Color Configuration
Ink Cartridge Setup: 47
Color Graphics.....70, 257
Color Mode, Turning on/off 222
Commands, User-store 167
Communication
Features.....65
Parallel Port.....53
Serial Port 57
Communication Cable 8
Configuration
Color 92
Color Ready Operation.....92
Entering Configuration.....38
Features 40
making Chnages 39
Manual Configuration 37
Manual Emulation Set.....37
Remote CONFIG Software 37
Single Cartridge Operation.....92
Using the New Cartridge Button 39
Viewing Settings 38
Configuration Control, Extending 195
Configuration Mode
Overview.....37
Using 37
Configurations 92
Configuring Print Drivers 76
Configuring the Cash Drawer Interface 21
Connecting Cash Drawer Cables 10
Connecting Communiation Cables 8
Connecting Power.....11
Connecting Power and Communications.....6
Connecting the Parallel Cable.....9
Connecting the Power Cord-no power supply 12
Connecting the Power Cord-with power supply 11
Connecting the Serial Cable 8
Connecting theCash Drawer Cable.....12
Connections
Parallel Interface 96
Parallel Pin Assignments.....96
RS-232 Serial Pin Assignments.....97
Serial Interface 97
Connections and Communications 6
Control Character, Printing.....140
Control Codes

Overview ... 116
Control Codes and Commands ... 118
Control Feature, Setting ... 194
Correcting Common Startup Problems ... 111
Cover Open Status, Inquire ... 199
Cut Mode/Cut paper, Selecting ... 242

D

Data pass-through ... 65
Display Pass Through ... 63, 98
Display pass-through ... 65
Double Density Graphics, Full-Speed Printing ... 160
Double Density Graphics, Half-Speed Printing ... 160
Double Strike Mode, On/Off ... 224
Drivers and Utilities Available ... 92
Dynamic Response, Enable ... 196

E

Eject slip ... 178
Electrical Characteristics ... 107
Emphasized Mode, On/Off ... 223
Emphasized Print Mode, Beginning ... 147
Emphasized Print Mode, Ending ... 147
Emulations
  Citizen 3500 ... 92
  EPOS ... 92
  IPCL Codes ... 92
  Star ... 92
End Italics ... 148
Enhanced Print Mode, Ending ... 147
Enhanced print, Beginning ... 147
EPOS
  Codes ... 207
  command summary ... 212
EPOS 90° Rotation Mode, On/Off ... 224
EPOS Absolute Print Position, Setting ... 228
EPOS Back Space, Setting ... 228
EPOS Bar Code Height, Setting ... 239
EPOS Bar Code, Printing ... 239
EPOS Character Size, Setting ... 225
EPOS Control Character, Printing ... 222
EPOS Emulation ... 117
EPOS Euro Character, Insert ... 222
EPOS Execute Macro ... 246
EPOS HRI Characters, Selecting Font ... 241
EPOS HRI Characters-Printing Position, Selecting 240
EPOS Italics, Beginning ... 225
EPOS Italics, Ending ... 225
EPOS Knife Cut-Partial ... 242
EPOS Knife Cut-Partial, Performing ... 242
EPOS Macro Definition, Start/End ... 246
EPOS margin-eft, Setting ... 229
EPOS Margin-left, Setting ... 229
EPOS Margin-Right, Setting ... 230
EPOS Motion Units, Setting ... 243
EPOS Nonvolatile Memory, Erasing All Entries ... 249
EPOS Nonvolatile Memory, Erasing Single Entry. 249
EPOS Paper Error Signal Control ... 252
EPOS Printing Area Width, Setting ... 229
EPOS Query Nonvolatile Memory Pool Information ... 251
EPOS Relative Print Position, Setting ... 228
EPOS Sound Buzzer ... 242
EPOS Startup Macro Definition, Deleting ... 247
EPOS Unidirectional Printing Mode, On/Off ... 229
EPOS User Defined Bit Image, Define ... 250
EPOS User Defined Bit Image, Defining ... 248
EPOS User Defined Bit Image, Printing ... 249, 251
EPOS User Defined Character Set, Saving ... 251
EPOS User Defined Character Set, Selecting ... 251
EPOS, Print and Reverse Feed ... 216
Error Status, Inquire ... 204
ESC [T <n_h> <n_l> Select character code table ... 220
Euro Character, Inserting ... 140
Extended APA Graphics ... 161
Extended diagnostics
  self test ... 36
Extended Diagnostics ... 36
  Hex-Dump ... 36

F

FCC Radio Interference Statement ... iii
Features
  Color Ready Options ... 47
Feed Button ... 3, 26
Firmware Check ... 35
Flow control
  Data Terminal Ready (DTR) ... 57
  Ready/Busy ... 57
  XON/XOFF ... 57
Form Button ... 3, 26
Form Feed ... 130
Form Length, Setting Inches ... 131
Form Length, Setting Lines ... 130
Form Orientation ... 30

G

Generate Pulse ... 244
Graphic
  Mode ... 160
Graphic Data, Proccessing ... 163
Graphic Mode, Reassigning ... 162
Graphic mode, Set Horizontal ... 164
Graphic save ... 165
Graphics
  all-points-addressable (APA) ... 69, 256
  Character ... 66, 253
  color ... 163
  horizontal ... 163
  Horizontal ... 69, 256
  printing ... 253
GS - <Name..> <0> x y d_1…d(x *x* y *x* 8)Define user-defined bit image ... 248
GS ! <n> Set character size ... 225

GS # <n> Insert Euro character 222
GS * x y d_1 … d(x *x* y *x* 8) Define single user-defined bit-image 250
GS / <m> Print single user-defined bit-image 251
GS ^ r t m Execute macro 246
GS _ Delete start-up macro definition 247
GS 0 <Name..> <0> Print user-defined bit image .. 249
GS 1 <Name..> <0> Erase single entry from nonvolatile memory 249
GS 3 Query nonvolatile memory pool information 251
GS 5 Erase all entries from nonvolatile memory pool 249
GS 6 <Name..> <0> Save user-defined character set 251
GS 7 <Name..> <0> Select user-defined character set 251
GS f <n> Select font for HRI characters 241
GS H <n> Select printing position of HRI characters 240
GS h <n> Set bar code height 239
GS k <m> <d_l> … <d_k> NUL Print bar code 239
GS L <n_l> <n_h> Set left margin 229
GS W <n_l> <n_h> Set printing area width 229

H

Home, Returning 230
Horizontal Motion Control 125
Horizontal Position, Setting 126
Horizontal Tab 125
Horizontal Tab Positions, Setting 229
Horizontal tab Stops, Setting 125
Horizontal Tab, Setting 228

I

IEEE 1284 buffer, Clearing 199
IEEE 1284 Response Buffer 55
Indicator Light Descriptions 4, 27
Indicator Lights 108
  Blink Patterns 112
  Error 4, 27
  Form 4, 27
  Left and Right Cartridge 4, 27
  Paper 4, 27
  Power 4, 27
Indicators
  Fault 109, 112
Initialize the Printer 191, 243
Ink Cartridge
  Determining Status 29
  Operating Conditions 105
  Single Color Operation 47
Ink Cartridges
  Feature Configuration 48
  Two Color Operation 48
  Two Color Ready Setup 48
  Using 28, 47
Inquire Commands 198
Inquire Responses 56
Installation
  Step 1
    Unpacking the Printer 5
  Step 2
    Connecting Power and Communications 6
  Step 3
    Paper Low Setup 13
  Step 4
    Loading Ink Cartidges and Paper 15
Installing a New Paper Roll, Insta-Load™ 17
Installing Ink Cartridges 15
Installing New Interface Cards 21
Installing New Paper Rolls 18
Installing Print Drivers 74
Installing USB Printer Drivers 75
Intercharacter Spacing, Setting 134
International Character Set, Selecting 137, 218
International Character Sets 219
IPCL Codes 117
Ithaca Specific POSjet™ Commands 252

J

Justification, Selecting 228
Justification, Setting 126

L

LED indicator
  cartridge left 108
  cartridge right 108
  error 108
  paper 108
  power 108
Level 0 diagnostics 35
Line feed 124
Line Feed, Performing 127
Line Feed, Reverse 131
Line Spacing Commands 217
Line Spacing, Enabling 128
Line Spacing, Feeding Lines 128
Line Spacing, Select Default 217
Line Spacing, Set at 2 ½, 16-inch and 7/72 inch 128
Line Spacing, Set-1/8 inch 127
Line Spacing, Set-n/216 inch 127
Line Spacing, Setting 217
Line Spacing-Variable, Setting 128

M

Machanical Error Status, Inquire 201
Macro Data, Run from user Store 168
Macro Data, Saving 166
Macro Data, Saving in user Store 168
Macro Record, Beginning 165
Macro Record, Ending 167
Macro Record, Ending name 165

Macro Record, Start 171
Macro Record, Starting 165, 167
Macro Record, Stop..... 171
Macro Record, Stop and Save 171
Macro Record, Stopping..... 165
Macro, Flag on Startup..... 169
Macro-Function Commands..... 246
Mechanism Control Commands..... 242
Media specifications
ink cartridge 105
Microline Emulation 117
Miscellaneous Commands 243
Mode 0..... 55
Mode 4..... 55
Multidrop configuration 65
Multi-Drop Control, Beginning..... 196
Multiline Mode..... 146

N

New Cartridge Button 3, 26
Non-Reportable Errors..... 110

O

OCR character
disable..... 143
enable..... 143
OCR Character, Disable..... 143
OCR Characters, Enabling 143
Off-line active 65
One Line/Double Wide Print, Beginning 145
One Line/Double Wide Print, Canceling..... 145
Operating the Keypad..... 2, 25
OPOS Drivers..... 75
OPOS Drivers Installation Instructions 75
Optional Printer Configurations 92
Optional Printer Features..... 91
Options..... 47
Output Paper end Signals, Selecting Paper Sensors
..... 192, 227

P

Panel Button Commands..... 225
paper Feed, Enable, Disable 191, 225
Paper Feed, Enable/Disable..... 252
Paper Low Adjustment Requirements..... 14
Paper Low Sensor..... 252
Adjusting..... 13
Paper Low Setup 13
Paper Motion..... 124
Paper Out Sensor, disable..... 189
Paper Out Sensor, enabling 189
Paper Out Status, Inquire..... 199
Paper Sensor Commands..... 226
Paper Sensors, Selecting to Stop Printing..... 192, 226
Parallel
Current Requirements.....97
Signal Levels.....97
Parallel Mode
Reset 64
Parallel port protocol 53
PcOS Control Codes.....118
PcOS Quick Reference Chart 119
Peripheral Devise Status, Selecting 244
Plug and Play
parallel.....56
Serial 61
Port Inquire
Parallel 55
Port Timing
Parallel.....53
POSjet® 1500 Specifications 91
Power Control, Remote 63, 195
Power Cycle Status, Inquire.....200
Power-cycle recovery 65
Preventing and Clearing Paper Jams.....32
Print
rotation.....149
Print and Carriage Return 215
Print and Feed Lines 215
Print and Feed Paper.....216
Print and Line Feed.....215
Print and Reverse Feed Lines 215, 216
Print Buffer Flow.....59
Print Buffer Size
Serial 61
Print buffer, control 189
Print Current Configuration.....267
Print Current totals.....267
Print margins, setting.....189
Print Modes, Selecting.....223
Print Position Commands 228
Print Quality Mode, Setting.....135
Print Style, Setting.....146
Print Supress/Data Pass Through, Enabling.....193
Printer
Color ready Option.....47
Printer Buffer Size.....55
Printer Diagnositics 33
Printer Drivers
Configuring 76
General Driver Information.....73
Installing.....74
Printer Features.....91
Printer ID, Inquire.....203
Printer Optional Features.....91
Printer Reset, Requesting.....200
Printer Self Tesing 33
Printer Specifications.....91
Printer State, Inquire.....201
Printer Status 197
Printer Status, Inquire 198, 202
Process User Macro 171
Product Information.....iii
Disclaimer iii
internet Sales Service v
Internet Support.....v
Product Support.....iv

Regulatory Compliance iii
Return Policies iv
Service iv
Shipping Printers iv
Warranty Information iv
Programmer's Notes 110
Programming Considerations 170
Programming Controls 116

Q

Quad Density Graphics, Printing 161
Query marker 190

R

Read and return Totals 266
Real Time Status, Transmitting 234
real-time Request to Printer 244
Remote Power Control 63, 195
Remote Power Down 34
Remote Reset 64
Removing a Paper Jam 32
Removing Old Interface Cards 20
Restraints 7
Rotated Font, Beginning 136
Rotated Print, 270° 150
Rotated Print, 270° with 2 Pass Font 151
Rotated Print, 270° with 2 Pass Font and line formatting 151
Rotated Print, 270° with Line Formatting 150
Rotated Print, 90° 150
Rotated Print, 90° with 2 Pass Font and Line Formatting 150
Rotated Print, 90° with Line Formatting 150
Rotated Print, Begin 90° with 2 pass font 150
Rotated Print, Beginning 149
Rotated Print, Ending 151
Rotated Print, Line Length 151

S

Section 1
Data Processing and Communications 49
Select Color 145
Select receipt station 155, 156, 157, 158, 178
Select Subscript 148
Select Superscript 148
Select validation mode 178
Self Test
Entering Self-Test Mode 19, 34
Exiting Self-Test Mode 19, 34
Hints and Suggestions 34
TEST-Print Configuration 33
TEST-Receipt 33
TEST-Validation 33
Self-Test Mode
Using 33
Serial Device Identification 61
Serial Mode
Reset 64
Serial port
flow control 57
Serial Port
Inquire 62
Series 50 Cash Drawer, Set Extended 206
Series 50 Pass through, Set Extended 206
Setting Paper Low 13
Setup Procedures 1
Single Density Graphics, Printing 160
Specifications
Accoustic Noise 95
Auto-cutter 94
Environmental Conditions 95
Interface 93
Media 105
Paper Roll Diameter 105
Power Requirements 96
Printer Dimensions 93
Printing 100
Receipt Paper 105
Relative Humidity 95
Reliability 95
Validation Form Requirements 106
Standard APA Graphics 160
Standard Emulation 117
Standard Printer Features 91
Star Emulation 117
Start up Macro, Flagging 166
Startup Troubleshooting 111
Status Commands 231
Status Inquire 197
Status, Inquire Receipt Paper Low 198
Superscript and Subscript 148
Supported Devices and Tools 92

T

Tab Stops, Resetting 126, 130
Testing the Printer 33
Time Outs 56
TM 200 and EPOS Command Descriptions 215
TM-200
Command Summary 209
Top of Form, Setting 130
TransAct Information
How to Contact Technical Support v
TransAct Technologies, Contacting Ithaca Facility v
Transmit Printer ID 243
Transmit Status 233
Troubleshooting
Correcting Common Operational Problems 114
Keypad Indicator Quick Reference Chart 113

U

Underline Mode, On/Off 223
Underline, Beginning 145, 147
Understanding Indicators 112
Unidirectional Printing, Beginning..... 162
Unpacking the Printer..... 5
Upside down Print Mode, On/Off 224
USB Support and Standards 52
User Defined Character Set, Selecting 217
User Defined Character, Saving 166, 168
User Defined Characters, Canceling 143, 218
User Defined Characters, Defining 142, 166, 218
User Defined Characters, Enabling 143
User macros 170
User store 165
User Store Status, Inquire..... 204, 205
User Store, Delete item 169
User Store, Flush Information 166, 169, 214, 242
User Store, Flushing information 166
User Store, Load item..... 168
User Store, Loading item..... 166
User Store, Removing Item 166
User Store, Report 169
User Store, Reporting 167
User-Defined Memory Commands.....248
Using DSR
Serial 61
Using Ink Cartridges.....47
Using Validation
Form Insertion and Orientation 30

V

Validation
Printer Settings 30
Validation Orientation 30
Verify Cash Drawer Interface.....21
Verticle Tab 129
Verticle Tab Stops, Setting 130

W

Where Can You Find More Information.....v